| REV | ECO # | DESCRIPTION | APPRV | DATE |
|---|---|---|---|---|
| | | | | |

NOTES:

1. AXIAL STROKE BELLOWS CORE:
   OPERATING EXTENDED L: 0.674
   OPERATING COMPRESSED L: 0.190
   OPERATING STROKE: 0.484
2. LATERAL OFFSET BELLOWS CORE:
   OPERATING @ EXTENDED L: 0.00
   OPERATING @ COMPRESSED L: 0.00
3. ANGULAR OFFSET BELLOWS CORE:
   OPERATING @ EXTENDED L: 0.0°
   OPERATING @ COMPRESSED L: 0.0°
4. TORQUE ON BELLOWS CORE:
   OPERATING: 0.00 IN•OZ
5. DEBURR AND BREAK MACHINED COMPONENTS:
   INSIDE EDGES R .003 TO .010
   OUTSIDE EDGES C .005 TO .010 X 45°
6. WELD PER BELLOWSTECH WI0131 SPEC.
7. DESIGN PRESSURE:
   INSIDE CORE AND OUTSIDE CORE ARE EQUAL DURING OPERATION - SEE NOTE 17
8. CYCLES AT ROOM TEMP 77°F:
   BEST EFFORT DESIGN - SEE NOTE 18
9. MATERIAL:
   FLANGES: INCONEL 625 PER AMS 5599 OR 5666
   BELLOWS CORE: INCONEL 625 PER AMS 5599
10. SPRING RATE:
    7.43 +/- 3.00 LB/IN
11. CHANGE IN VOLUME PER STROKE:
    .00028 IN^3 [1.138cc]
12. LEAK RATE:
    1 X $10^{-5}$ std cc He/SEC
13. CLEAN & PACKAGE:
    PER BELLOWSTECH WI0100 & WI0110 SPEC.
14. APPLICABLE STANDARDS / SPECIFICATIONS:
    ASME Y14.100-2004 ENGINEERING DRAWING PRACTICES.
    ASME B46.1 SURFACE FINISH
    ASME Y14.5M-2009 DIMENSIONING & TOLERANCING
15. G.D.&T.:
    ALL DIAMETERS EXCEPT MOUNTING HOLE DIAMETERS ON INDIVIDUAL MACHINED COMPONENTS MUST BE ◎ .005 TO ONE CYLINDRICAL DATUM.
    ALL DIAMETERS AND MOUNTING HOLE DIAMETERS ON INDIVIDUAL MACHINED COMPONENTS MUST BE ⊥ .005 TO ONE FLAT DATUM SURFACE.
16. REFERENCE DIMENSIONS:
    DIMENSIONS IN PARENTHESIS OR LABELED AS REFERENCE MAY DIFFER 20% OR MORE FROM ACTUAL MANUFACTURED DIMENSIONS. REFERENCE DIMENSIONS ARE NOT TO BE INTERPRETED AS HARD DIMENSIONS.
17. BELLOWS CORE WILL BE PRE-FILLED WITH AN INCOMPRESSIBLE FLUID. BELLOWS CORE REQUIRES ~6.5 PSID INTERNAL TO FULLY EXTEND THE BELLOWS FROM THE NOMINAL FREE LENGTH. DURING OPERATION THE PRESSURE ON THE OUTSIDE OF THE BELLOWS AND THE INSIDE OF THE BELLOWS WILL BE EQUAL. THE ONLY DIFFERENTIAL WILL BE CAUSED BY THE SPRING FORCE ON THE MEAN EFFECTIVE AREA.
18. DUE TO APPLICATION THIS IS A BEST EFFORT DESIGN. ANALYTICALLY THE BELLOWS WILL HAVE A CYLE LIFE OF GREATER THAN 10,000 CYCLES. CUSTOMER TO TEST TO DETERMINE ACTUAL CYCLE LIFE.

QUOTE FOR REFERENCE ONLY. NOT TO BE USED FOR MANUFACTURING OR DEVELOPMENT.

BELLOWS CORE FOR VISUAL REPRESENTATION ONLY

END TO END ALIGNMENT: NONE

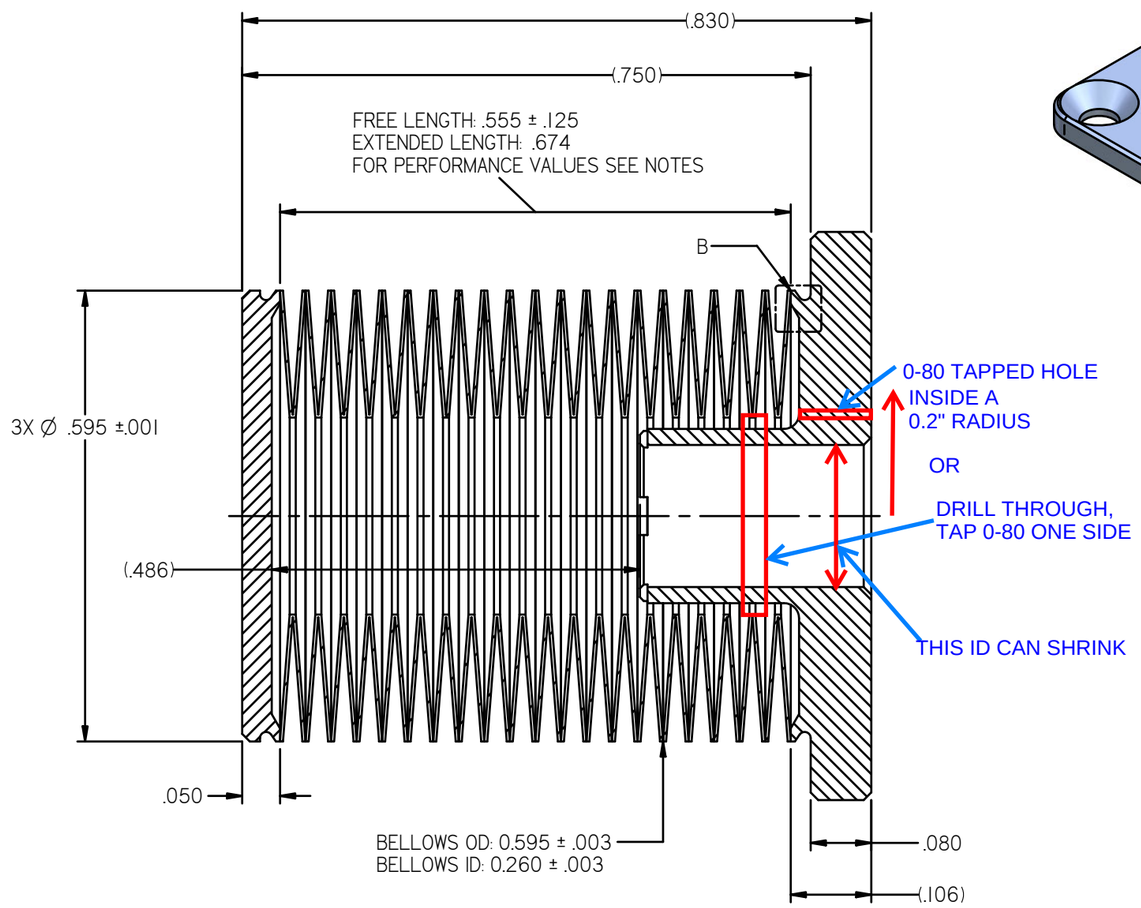


SECTION A-A, SHOWN AT EXTENDED LENGTH

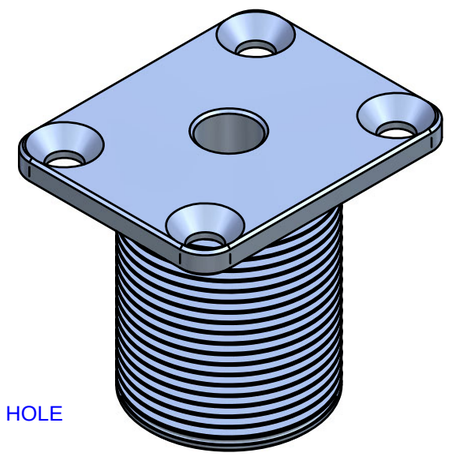

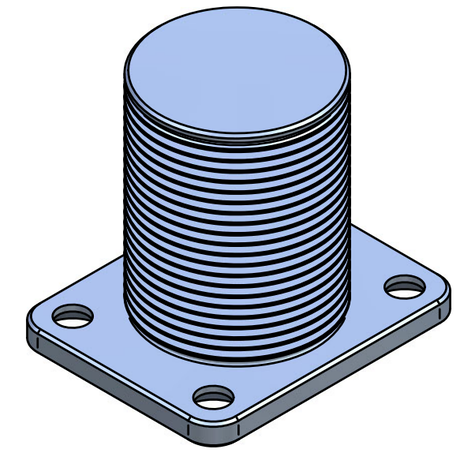

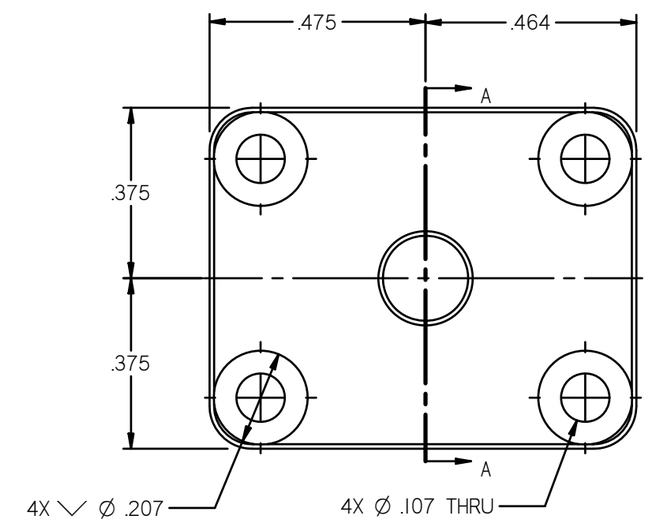


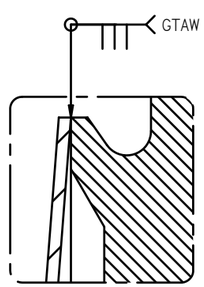


2X DETAIL B

| | | | |
|---|---|---|---|
| CAGE CODE 1UEL3 | SIZE B | SCALE: NONE | BellowsTech Confidential |
| U.O.S. TOLERANCES / ASME Y14.5 2009<br>X.XXXX ± .0005 X° ± 1°<br>X.XXX ± .005 X.X° ± .5°<br>X.XX ± .010 X.XX° ± .25°<br>X.X ± .050 FRACTIONS ± 1/64 | BellowsTech, LLC.<br>1289 N. US Highway 1, Suite #1<br>Ormond Beach, FL 32174<br>PH: 386-615-7530<br>FAX: 386-615-7973 | | TITLE : BELLOWS ASSEMBLY |
| 32 ✓ THIRD ANG. PROJ. DIMS IN INCHES | ENGINEERED BY: MJZ | DRAWN BY: MJZ | P/N : 0060A-138 Rev 1 |
| | | | DATE: 21JUNE21 SHEET: 1 of 1 |