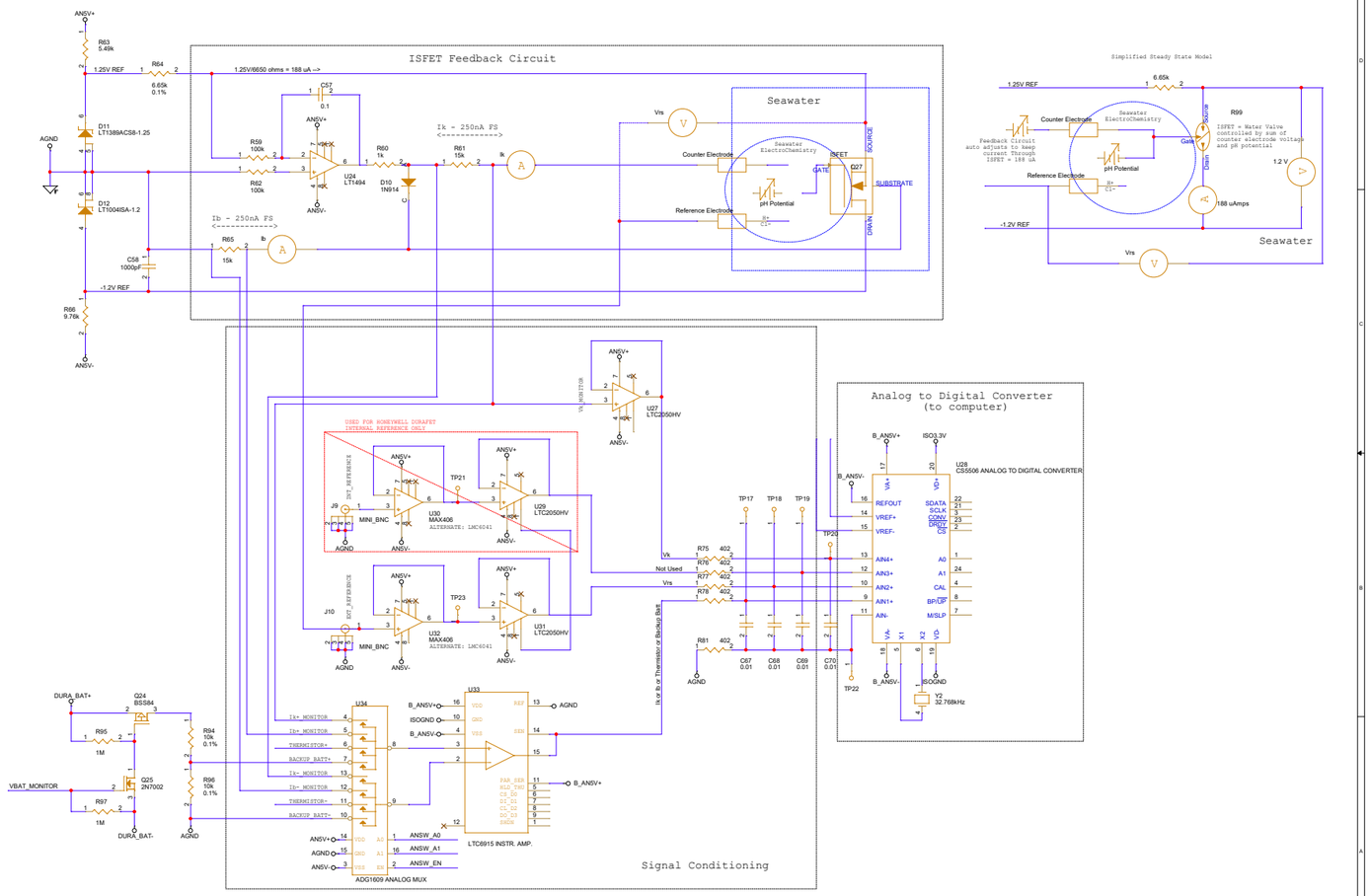
ISFET Feedback Circuit
Seawater
Simplified Steady State Model
Analog to Digital Converter
(to computer)
Signal Conditioning
ADG1609 ANALOG MUX
LTC6915 INSTR. AMP.
U28
CS5506 ANALOG TO DIGITAL CONVERTER
U24
LT1494
U30
MAX406
U32
MAX406
U27
LTC2050HV
U29
LTC2050HV
U31
LTC2050HV
U33
U34
Q24
BSS84
Q25
2N7002
D11
LT1389ACS8-1.25
D12
LT1004ISA-1.2
D10
1N814
R99
6.65k
Counter Electrode
Reference Electrode
pH Potential
Feedback Circuit
auto adjusts to keep
current Through
ISFET = 188 uA
ISFET = Matar Valve
controlled by sum of
counter electrode voltage
and pH potential
188 uAmps
1.2 V
-1.2V REF
1.25V REF
Vrs
Ik - 250nA FS
Ib - 250nA FS
1.25V/6650 ohms = 188 uA -->
Ik or Ib or Thermistor or Backup Batt
Not Used
DURA_BAT+
DURA_BAT-
VBAT_MONITOR
AGND
AN5V+
AN5V-
B_AN5V+
B_AN5V-
ISO3.3V
ISOGND
ANSW_A0
ANSW_A1
ANSW_EN
MINI_BNC
J9
J10
TP17
TP18
TP19
TP20
TP21
TP22
TP23
Title
<Title>
Size
C
Document Number
<Doc>
Rev
<RevCode>
Date:
Wednesday, December 17, 2025
Sheet
1
of
1