THE INFORMATION CONTAINED IN THIS DRAWING IS THE SOLE PROPERTY OF MBARI ANY REPRODUCTION IN PART OR WHOLE WITHOUT THE WRITTEN PERMISSION OF MBARI IS PROHIBITED.

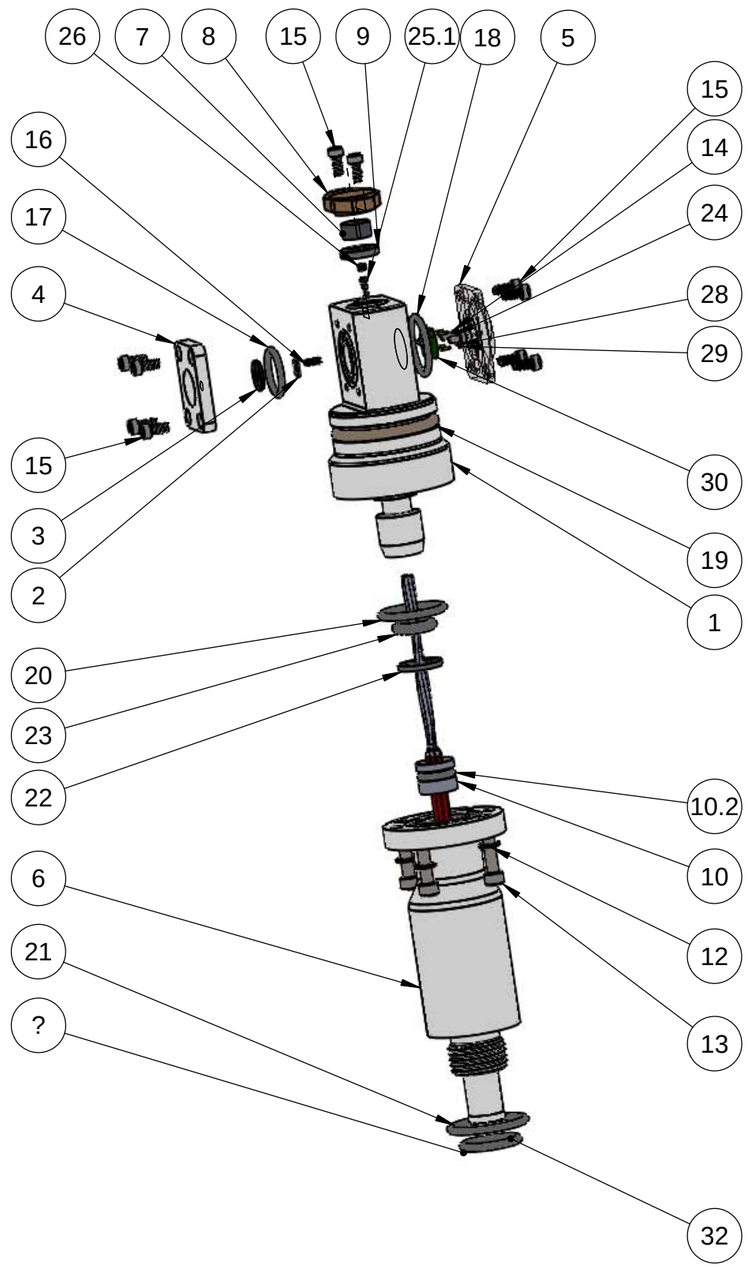

Status: Released to Manufacturing

MBARI BOM

ITEM NO.	Revision	SW-File Name(File Name)	Vendor	VendorNo	Dwg Num	ASSY. QTY.
1	O	Housing	MBARI		100221678	1
2	C	DuraFETchip6	MBARI CFE			1
3	D	duraFETFaceGasket_Viton_D75A	McMaster Carr	86075K21	100221683	1
4	D	FrontCoverPlateTallShoulder	MBARI		100221681	1
5	E	backCoverPlate	MBARI		100221684	1
6	E	portAdapter	MBARI		100221685	1
7	E	VLRefPelletAlteredItem	Van London	Chloride ISE Pellet 7.2mm x 4.6mm MBARI-001 use MBARI Pin and Die	100221686	1
8	F	VLRefElectrodeCap	MBARI		100221687	1
9	C	ORingSquare-010	McMaster Carr	4061T115		1
10	C	PaveTech16321				1
10.1	D	PaveTech16321	Pave Technology	16321		1
10.2	C	ORingViton-10	Pave Technology			1
~~11~~	~~C~~	~~o-ring 3-906_vitond75a~~	~~McMaster-Carr~~	~~5267T488~~		~~1~~
12	C	regular lw 0.112	United Titanium	1-01-322-00.00		4
13	C	hx-shcs 0.112-40x0.375x0.375-n	McMaster-Carr	95435A350		4
14	C	hx-shcs 0.06-80x0.125x0.125-n	McMaster Carr	92196A052		2
15	D	SHCS Ti2-56x0.188	McMaster Carr	95435A207		10
16	C	Fuzzbutton	Custom Interconnects	80-020125		3
17	C	ORing1.5x10mm_Buna_D70A	McMaster Carr	9262K127		1
18	C	1.5x13mmORing_Buna_D70A	McMaster Carr	9262K123		1
19	C	ORing-118_Silicon_D70A	McMaster Carr	9396K75		1
20	C	ORing-015_Buna_D70A	McMaster Carr	4198T511		1
21	C	ORing-017_Viton_D75A	McMaster Carr	9464K71		1
22	C	backupRing108	McMaster Carr	5288T163 (MC special order)		1
23	C	MIL SPEC O-RING-108	McMaster-Carr	5018T533		1
24	C	sbhcscrew 0.06-80x0.125-hx-n	McMaster-Carr	92949A050		1
25	C	VLPelletContact			100221688	1
25.1	F	VLPelletContactAlteredItem	Mill-Max	0286-0-00-34-00-00-03-0		1
25.2	F	Wire	Weico	2330		1
25.3	F	VLPelletWireSolder	Kester	24-6337-8808 or 24-6337-9756 or AIM SN100C		1
26	D	VLPelletFuzzButton	Custom Interconnects	80-075075		1
~~27~~	~~B~~	~~PWB4~~			~~100221659~~	~~1~~
~~27.1~~	~~B~~	~~100221480rb2_isfetinterfacepcb~~				~~1~~
~~27.2~~	~~B~~	~~mill-max-8969-0-05-21-00-00-03-0~~	~~Mill-Max~~	~~8969-0-05-21-00-00-03-0~~		~~4~~
~~27.3~~	~~B~~	~~mill-max-4068-0-00-15-00-00-33-0~~	~~Mill-Max~~	~~4068-0-00-15-00-00-03-0~~		~~3~~
28	C	Stainless Steel Split Lock Washer	McMaster-Carr	92146A510		1
29	C	18-8 Stainless Steel Washer	McMaster-Carr	9214A002		1
32		VitonO-Ring 3-906 D90A	McMaster-Carr	9752K116		1
~~33~~		~~9752K116_Chemical-Resistant Viton Fluoroelastomer O-Rings~~	~~McMaster-Carr~~	~~9752K116~~		~~1~~
30	B	PWB4			100221659 and 100221480	1

BILL OF MATERIALS

NEXT ASSY Description	NEXT ASSY Number

THIRD ANGLE PROJECTION

UNLESS OTHERWISE SPECIFIED TOLERANCES ARE:

1 PLACE DIM ±1/16	2 PLACE DIM ±.02	3 PLACE DIM ±.005	ANGLES ±1°

1. DIMENSIONS ARE IN INCHES
2. DIMENSION LIMITS HELD AFTER PLATING.
3. REMOVE BURRS AND SHARP EDGES .015 MAX.
4. MACHINED FILLET RADII .0150-.030.
5. MACHINED DIAMETERS ON A COMMON CENTERLINE CONCENTRIC WITHIN .OO5
6. PERPENDICULARITY & PARALLELISM OF MACHINED SURFACES .002 PER INCH. MAX .012 INCHES FOR SINGLE SURFACE.

DO NOT SCALE DRAWING

APPROVALS	DATE
DRAWN	Gene M.
ENGINEER	Gene M.
CHECKED	
PROJECT NO.	901217
PROJECT	Chem Sensors
MAT'L	

Monterey Bay Aquarium Research Institute
M B A R I
7700 Sandholdt Rd.
Moss Landing, CA 95039
831 775-1922

GDF ASSEMBLY

SIZE	DWG. NO.	REV.
B	100221682	D

SCALE 1:4 | CAD FILE: | SHEET 1 OF 1