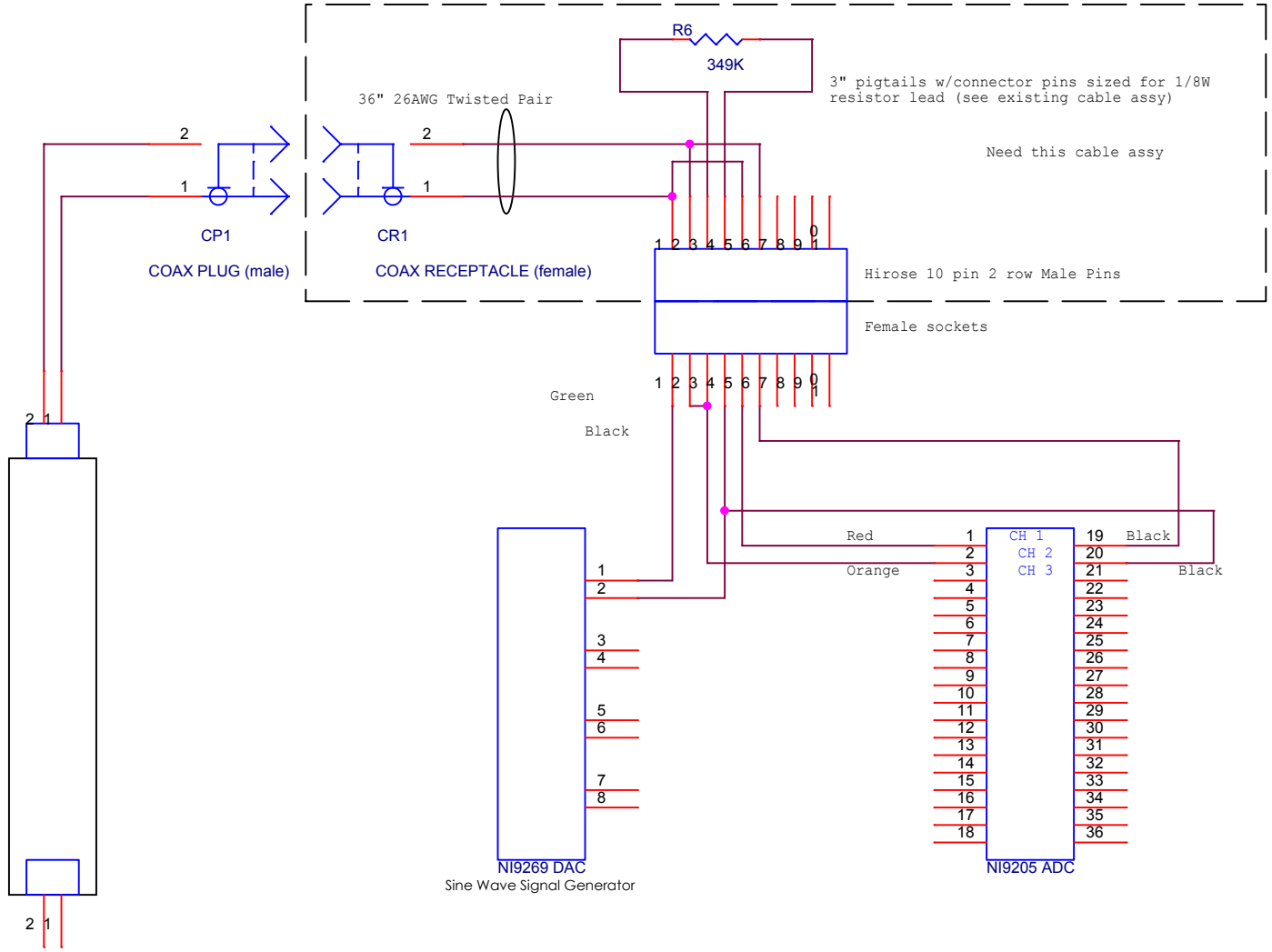

Title <Title>		
Size A	Document Number <Doc>	Rev <RevCode>
Date: Tuesday, August 14, 2012	Sheet 1 of 1	