DATE	SYM	REVISION RECORD	AUTH.	DR.	CK.
3/99	A	CHANGE DIA.	RMB		
--	B	CHANGED LENGTH	RMB		
1.20.04	C	LENGTHENED	CB	KLP	
7.12.04	D	ADDED DIAMETER	DW	KLP	
2.17.06	E	REMVE INCORRECT DIM	CB	CB	
5.08.13	F	ADD TOLERANCE TO .702		SD	

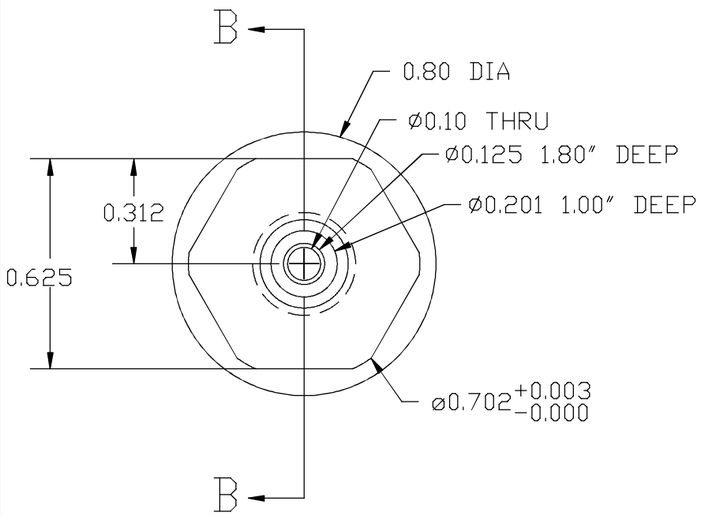

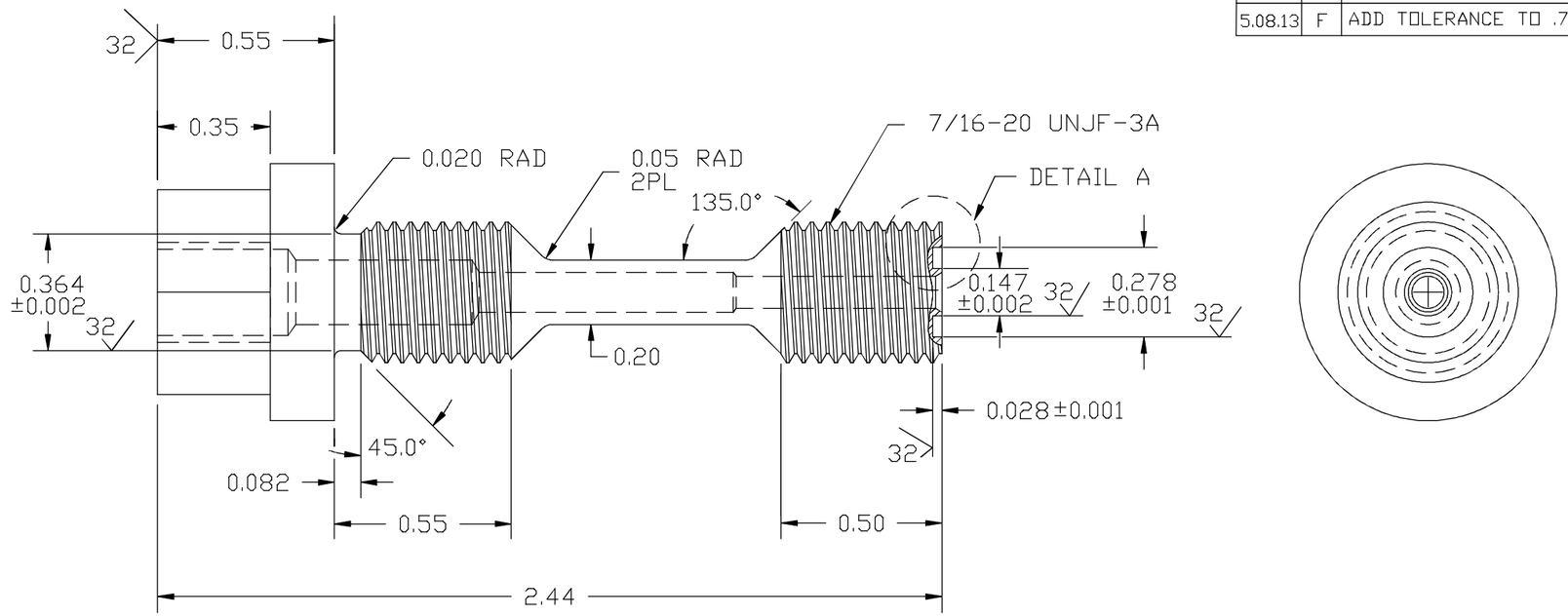

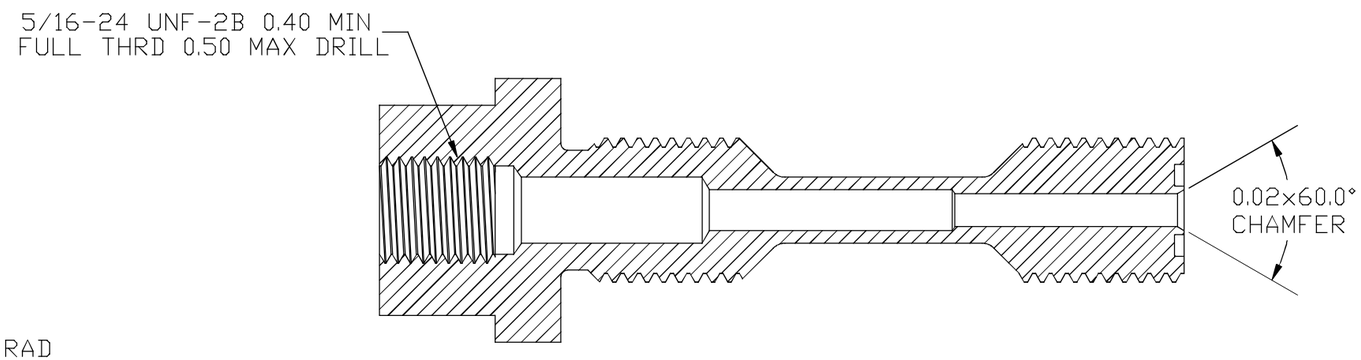

SECTION B-B

DETAIL A

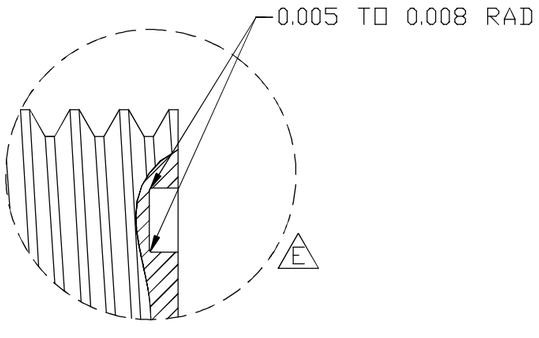

NOTES :
MATERIAL = CP2
TOLERANCES X.XX = ±0.01
X.XXX = ±0.005
FINISH 63 UNLESS NOTED.

TOLERANCES	SEA-BIRD ELECTRONICS, INC		
FRACTIONAL	P/N 231606	SCALE 2:1	DRAWN BY RMB APPROVED BY
DECIMAL	TITLE ALACE PRESSURE PORT		
ANGULAR	DATE 2/22/99	DRAWING NUMBER 21667	REV F