THE INFORMATION CONTAINED IN THIS DRAWING IS THE SOLE PROPERTY OF MBARI ANY REPRODUCTION IN PART OR WHOLE WITHOUT THE WRITTEN PERMISSION OF MBARI IS PROHIBITED.

REVISIONS			
REV.	DESCRIPTION	DATE	APPROVED
	INITIAL RELEASE		

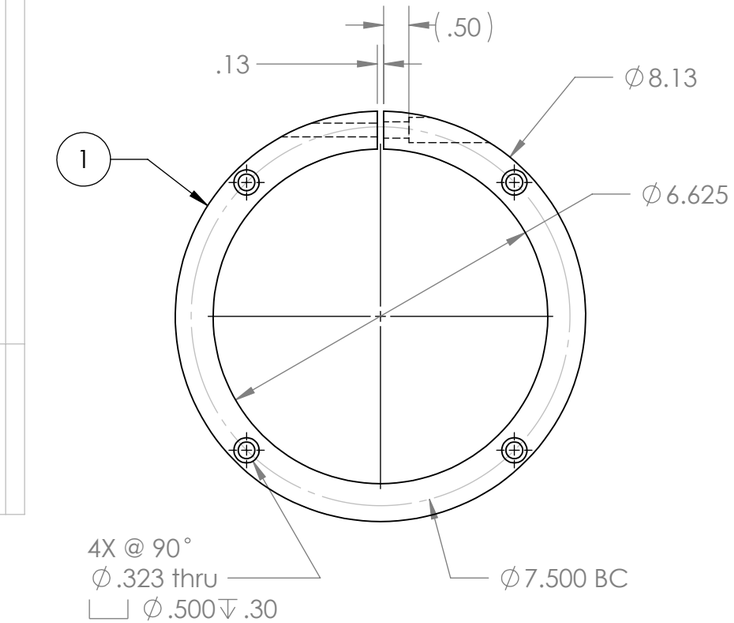

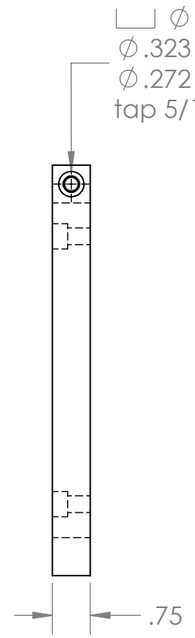

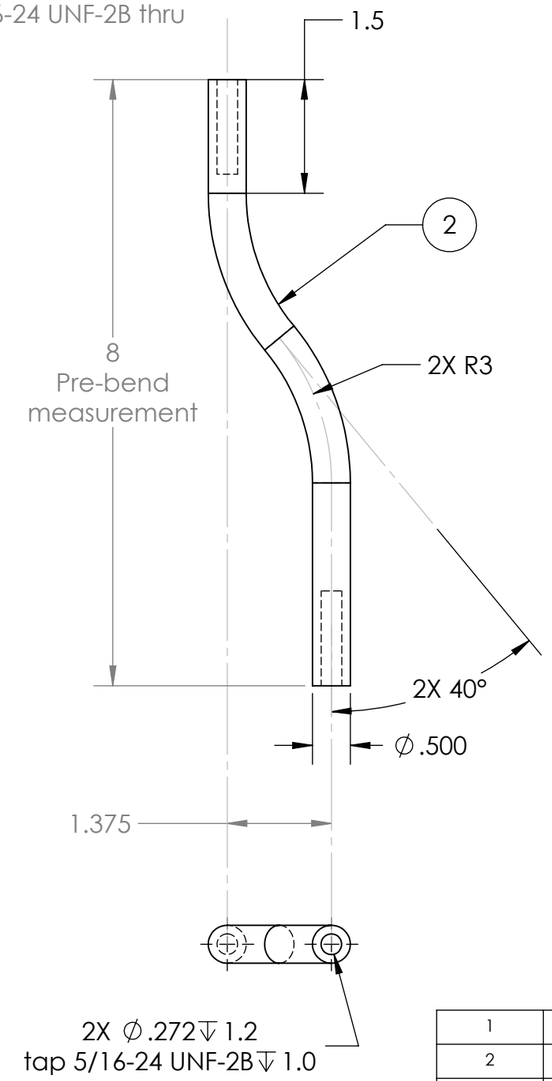

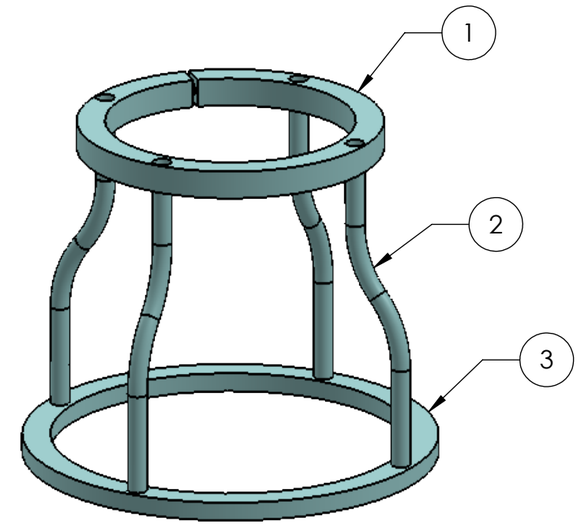

ASSEMBLY

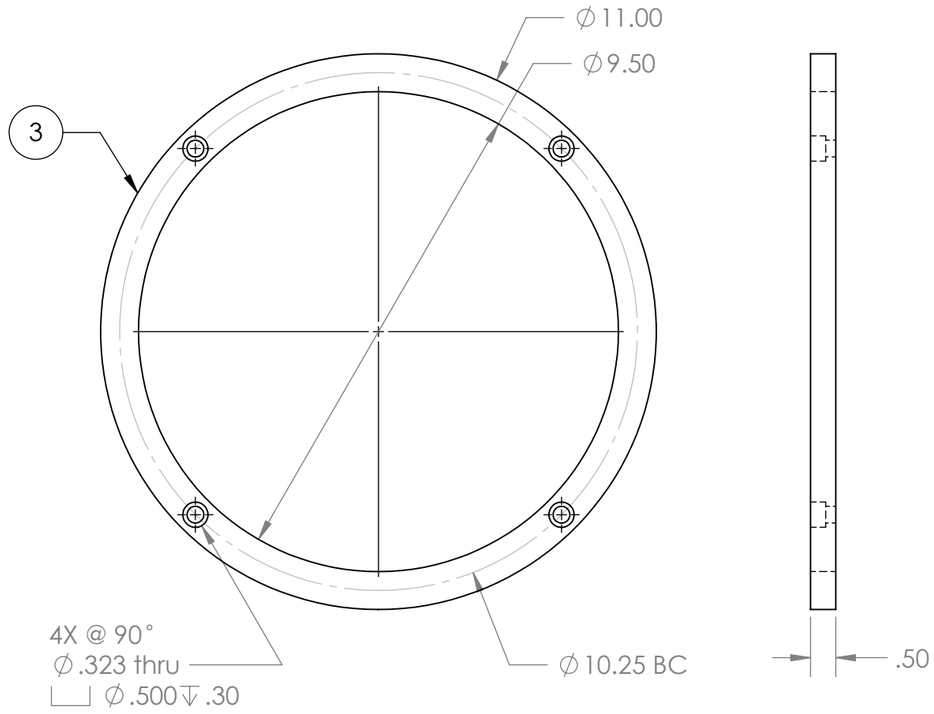

NOTE:
Use 1@ 5/16UNF x 1.5"
Use 8@ 5/16UNF x 1"

Item No.	Qty	Part No.	Description	Material Specification
1	1		Stand-ring (upper)	3/4" Al plate
2	4		Stand-leg	1/2" Al rod
3	1		Stand-ring (lower)	1/2" Al plate

Bill of Materials

Shop / Q.C.	
Inspector	
Shop Foreman	
Engineer	
NEXT ASSY Description	NEXT ASSY Number
Application	

UNLESS OTHERWISE SPECIFIED TOLERANCES ARE:

1 PLACE DIM	2 PLACE DIM	3 PLACE DIM	ANGLES
±1/16	±.02	±.005	±1°

1. DIMENSIONS ARE IN INCHES
2. DIMENSION LIMITS HELD AFTER PLATING.
3. REMOVE BURRS AND SHARP EDGES .015 MAX.
4. MACHINED FILLET RADII .0150-.030.
5. MACHINED DIAMETERS ON A COMMON CENTERLINE CONCENTRIC WITHIN .OO5
6. PERPENDICULARITY & PARALLELISM OF MACHINED SURFACES .002 PER INCH. MAX .012 INCHES FOR SINGLE SURFACE.

DO NOT SCALE DRAWING

APPROVALS	DATE
DRAWN Hans Jannasch	9/19/2016
ENGINEER	
CHECKED	
PROJECT NO.	901217
PROJECT	Chemical Sensors
WEIGHT	

Monterey Bay Aquarium Research Institute
MBARI
7700 Sandholdt RD.
Moss Landing, CA 95039
PH: (831) 775-1700

Dummy Float Stand

SIZE	DWG. NO.	REV.
B	304jaha_DummyFloatStand	

SCALE 1:3 | CAD FILE: Tornado/chem/SWfiles | SHEET 1 OF 1