REV.	DATE	BY	DESCRIPTION	CHECKED
A	11-6-06	CBS	ADDED 45 DEGREE DIM. TO PORT	
B	5-21-08	CBS	CORRECTED REV LETTER	

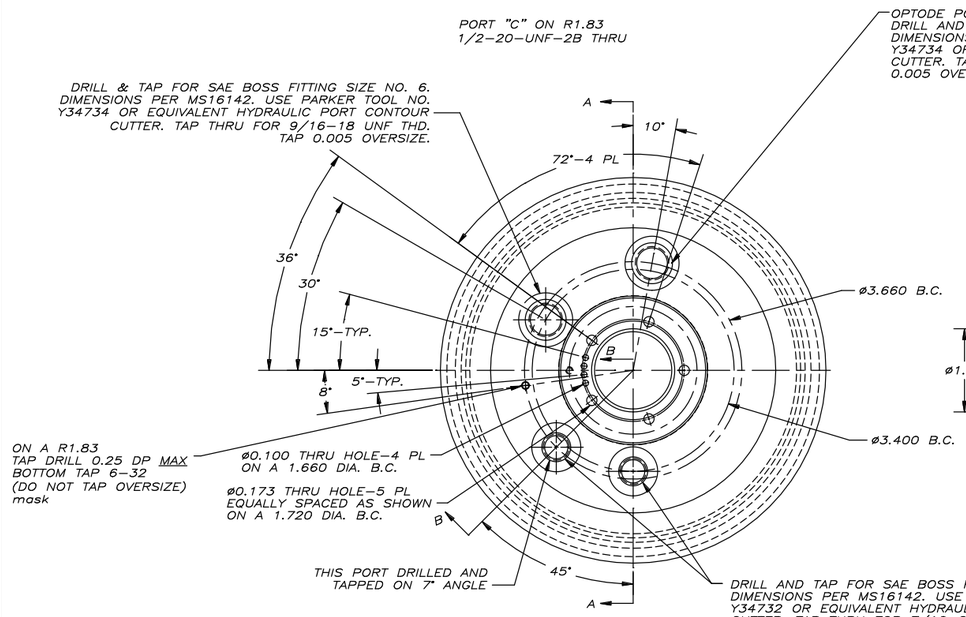

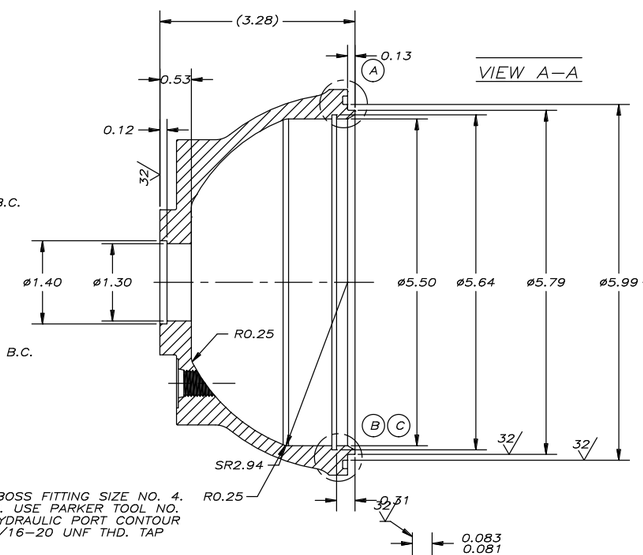

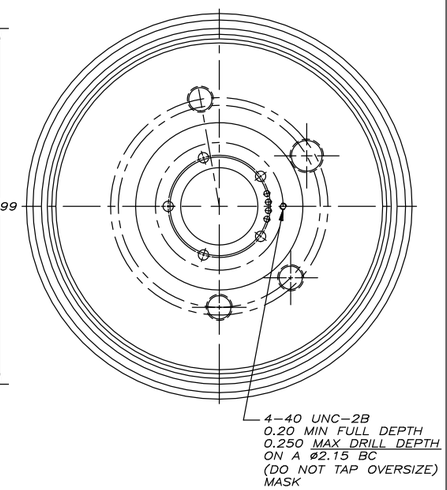

PORT	MOUNTS
B	DWG 2008, STALK, OXYGEN OPTODE

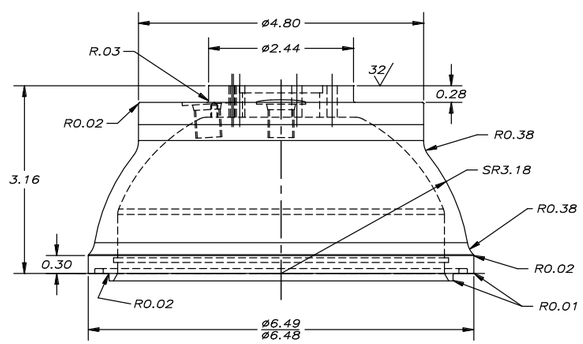

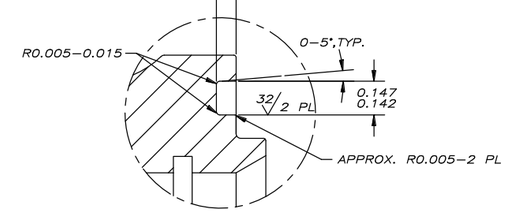

GROOVE DETAIL (A)
SCALE 4:1

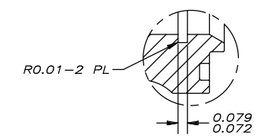

GROOVE DETAIL (B)
SCALE 2:1

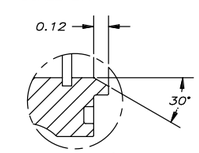

DETAIL (C)
SCALE 2:1

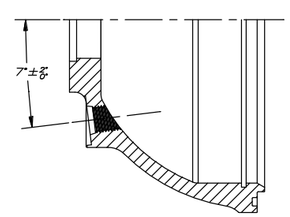

VIEW B-B

7° ANGLE APPLIES TO ONE PORT ONLY

NOTES:

1. BREAK AND SMOOTH ALL SHARP EDGES. MIN R.010
2. DIMENSIONS APPLY BEFORE ANODIZING.
3. SURFACE ROUGHNESS APPLY AFTER ANODIZING.
4. THREAD SPECS. APPLY AFTER ANODIZING. TAP OVERSIZE ACCORDINGLY (EXCEPT MASKED THREADS).
5. BASED ON DWG. 2105
6. USED FOR IRIDIUM + OPTODE COMBINATION, JOB 1252

THIS DOCUMENT CONTAINS PROPIETARY INFORMATION. IT MAY NOT BE COPIED, DISSEMINATED, OR USED FOR MANUFACTURING, WITHOUT THE PRIOR WRITTEN CONSENT OF WEBB RESEARCH CORPORATION.

UNLESS OTHERWISE SPECIFIED DIMENSIONS ARE IN INCHES
TOLERANCES
FRAC ±1/16 DECIMALS .xx ±.01 .xxx ±.005
ANGULAR ±1°
DO NOT SCALE DRAWING

MATERIAL: 6061 T6511 EXTRUDED ALUMINUM QQ-A-200/8

PROJECT NO.
DRAWN: CLYDE STREETER — DATE: 15SEPT06
CHECKED
APPROVED
FINISH: SEE SHEET 2

WEBB RESEARCH CORPORATION

TITLE: END CAP, UPPER, APEX IRIDIUM + OPTODE VERSION

SIZE: D — DWG. NO. 2583 — REV. B
SCALE 1:1 — CAD FILE: 2583-1 — SHEET 1 OF 2