DATUM	XX								LAST LTR USED	XX
LOCATION	XX-XX								ALSO USED	XX

CAD MAINTAINED. CHANGES SHALL BE INCORPORATED BY THE CURRENT DESIGN ACTIVITY

REVISION HISTORY - ALL SHEETS ARE THE SAME REVISION

ZONE	REV	DESCRIPTION	DATE	APPROVED
	-	SEE INITIAL RELEASE ECO-XXXXX	YYYY-MM-DD	XXXXXXXXXX

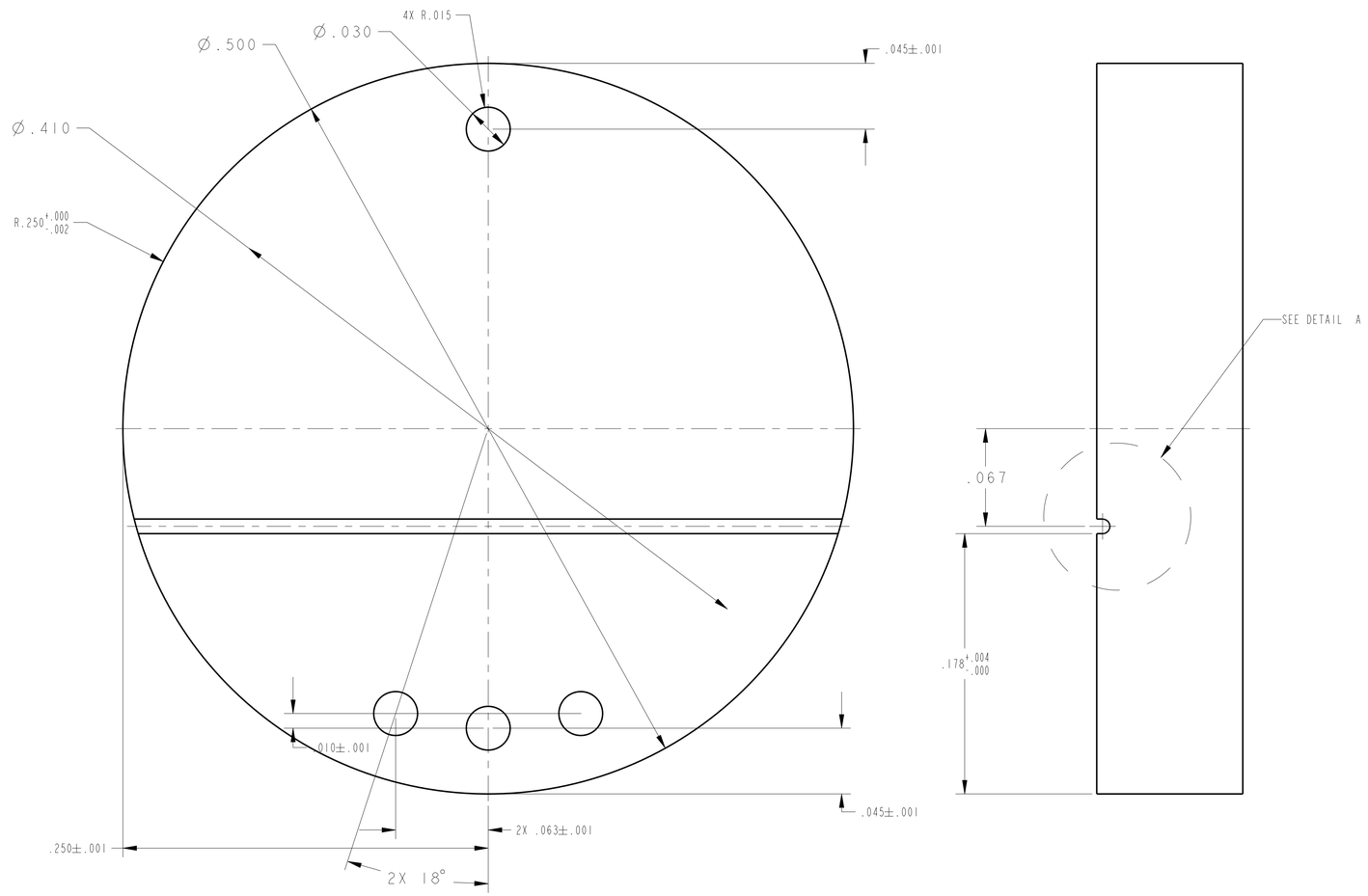

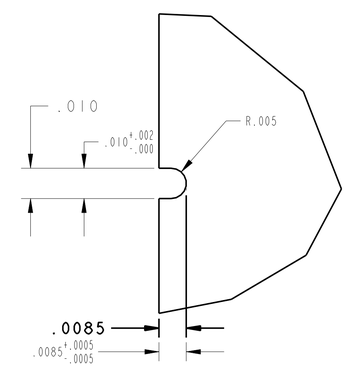

DETAIL A
SCALE 40/1

1 - DIMENSIONING AND TOLERANCING IAW ANSI Y14.5M - 1982
TOLERANCES UNLESS OTHERWISE SPECIFIED
ANGLES ± 1°
.XX ± .01
.XXX ± .005

2 - MATERIAL :

US GOVERNMENT DATA RIGHTS
NONE

HONEYWELL DATA RIGHTS
HONEYWELL STANDARD PROPRIETARY

HONEYWELL-CONFIDENTIAL:
THIS COPYRIGHTED WORK AND ALL INFORMATION ARE THE PROPERTY OF HONEYWELL, CONTAIN TRADE SECRETS AND MAY NOT, IN WHOLE OR IN PART, BE USED, DUPLICATED, OR DISCLOSED FOR ANY PURPOSE WITHOUT PRIOR WRITTEN PERMISSION OF HONEYWELL. ALL RIGHTS RESERVED.

NEXT ASSY	USED ON
????????-???	????????

INITIAL APPLICATION

SIMILAR PART NO: NA

PROGRAM: NOPP/MBARI Sensor

MA WORK ORD/EWO/NETWORK ACTIVITY NO: NA

SALES ORDER NUMBER: NA

THIRD ANGLE PROJECTION

DRAWING START DATE	2012-08-20
DESIGN Donald Horkheimer	YYYY-MM-DD
CHECKER ?????	YYYY-MM-DD
PROJECT ?????	YYYY-MM-DD
QUALITY ?????	YYYY-MM-DD
ANALYST ?????	YYYY-MM-DD

ELECTRONIC APPROVALS
INITIAL RELEASE: ECO-?????
ALL APPROVALS CONTROLLED BY THE PRODUCT DATA MANAGEMENT SYSTEM

CONTRACT NUMBER: NA

HONEYWELL INTERNATIONAL INC.
Aerospace - Plymouth, MN USA

Honeywell

TITLE

Ceramic Substrate

SIZE	CAGE CODE	DWG NO	REV
D	34168	SUBSTRATE	-

SCALE: 20/1 | WT: 0.00 LB CALC | SHEET 1 OF 1