THE INFORMATION CONTAINED IN THIS DRAWING IS THE SOLE PROPERTY OF MBARI ANY REPRODUCTION IN PART OR WHOLE WITHOUT THE WRITTEN PERMISSION OF MBARI IS PROHIBITED.

REVISIONS

REV.	DESCRIPTION	DATE	APPROVED
	INITIAL RELEASE	9/20/00	J.E.

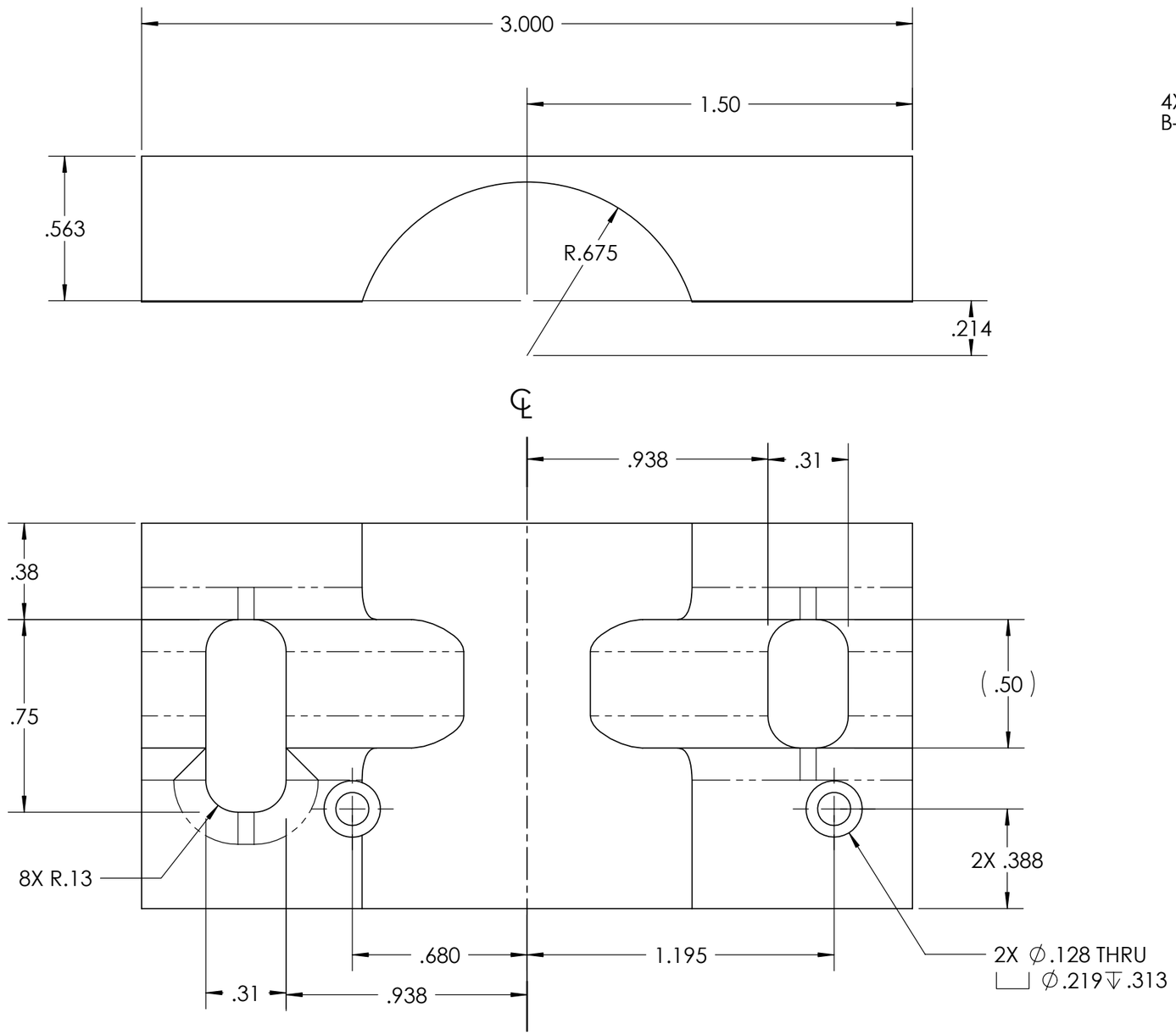

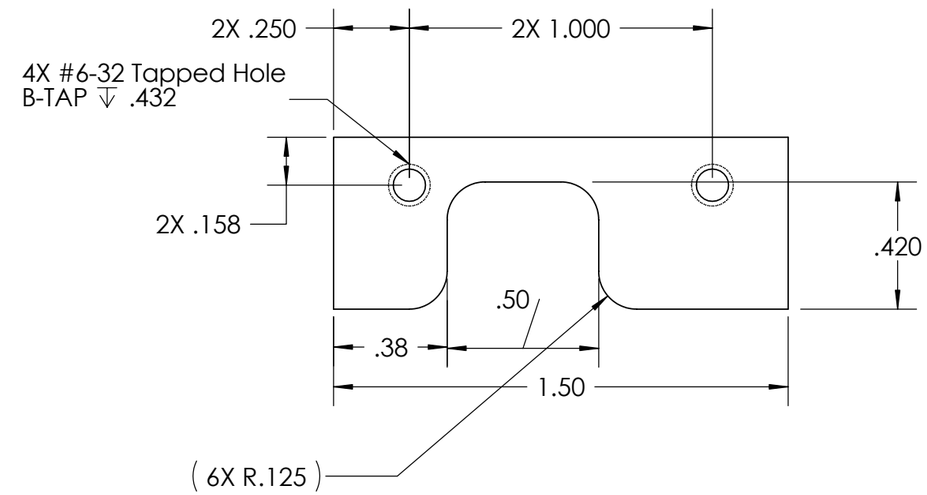

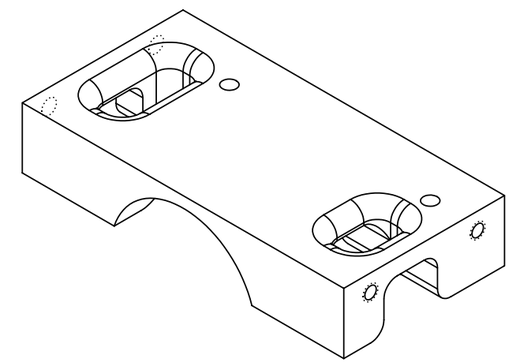

ITEM NO.	QTY.	PART NO.	DESCRIPTION	MATERIAL
3	1	101014_Bat.Bracket1	FLT. PLATE	DELRIN

ITEM NO.	QTY.	PART NO.	DESCRIPTION	MATERIAL SPECIFICATION

BILL OF MATERIALS

UNLESS OTHERWISE SPECIFIED TOLERANCES ARE:

1 PLACE DIM	2 PLACE DIM	3 PLACE DIM	ANGLES
±1/16	±.02	±.005	±1°

1. DIMENSIONS ARE IN INCHES
2. DIMENSION LIMITS HELD AFTER PLATING.
3. REMOVE BURRS AND SHARP EDGES .015 MAX.
4. MACHINED FILLET RADII .0150-.030.
5. MACHINED DIAMETERS ON A COMMON CENTERLINE CONCENTRIC WITHIN .OO5
6. PERPENDICULARITY & PARALLELISM OF MACHINED SURFACES .002 PER INCH. MAX .012 INCHES FOR SINGLE SURFACE.

APPROVALS	DATE
DRAWN J. ERICKSON	9/20/00
ENGINEER J. ERICKSON	9/20/00
CHECKED	
PROJECT NO. 600044	
PROJECT CHEMICAL SENSORS	
WEIGHT	

Monterey Bay Aquarium Research Institute
MBARI
7700 Sandholdt RD.
Moss Landing, CA 95039
PH: (831) 775-1700

I.S.U.S.
101014_Bat.Bracket1

SIZE B | DWG. NO. 101014.DWG | REV.

SCALE 2:1 | CAD FILE: MECH ENG ON TORNADO | SHEET 1 OF 1

101011	101012
NEXT ASSY	USED ON
APPLICATION	

DO NOT SCALE DRAWING

7. PROJECT LIBRARY:\200022-Isus_housing\ISUS_RevB

NOTES: (CONT. FROM TITLE BLOCK)