THE INFORMATION CONTAINED IN THIS DRAWING IS THE SOLE PROPERTY OF MBARI ANY REPRODUCTION IN PART OR WHOLE WITHOUT THE WRITTEN PERMISSION OF MBARI IS PROHIBITED.

REVISIONS		
INITIAL RELEASE	X/XX/01	J.E.

013.550
009.525
017.736
130.289
028.900

200.000

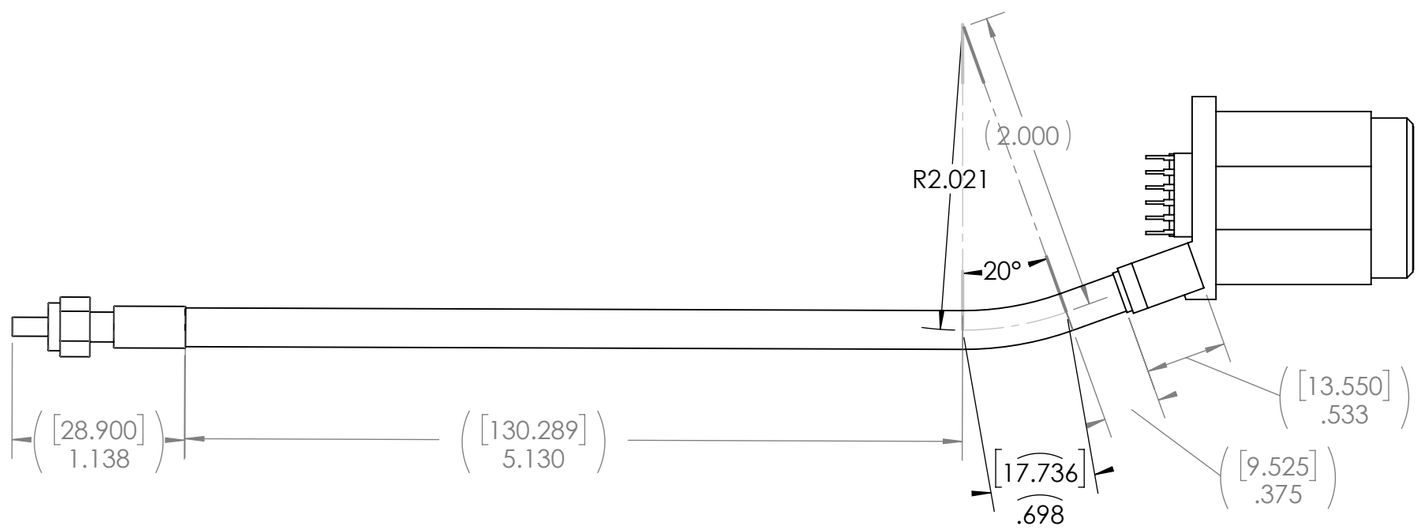

7. PROJECT LIBRARY:\ChemSensors\JonE\ISUS-APEX_2000m\Zeiss_7.16.20

NOTES: (CONT. FROM TITLE BLOCK)

ITEM NO.	QTY.	PART NO.	DESCRIPTION	VENDOR	MATERIAL SPECIFICATION

BILL OF MATERIALS

Shop / Q.C.	
Inspector	
Shop Foreman	
Engineer	
NEXT ASSY Description	NEXT ASSY Number
Application	

UNLESS OTHERWISE SPECIFIED TOLERANCES ARE:

1 PLACE DIM	2 PLACE DIM	3 PLACE DIM	ANGLES
±1/16	±.02	±.005	±1°

1. DIMENSIONS ARE IN INCHES
2. DIMENSION LIMITS HELD AFTER PLATING.
3. REMOVE BURRS AND SHARP EDGES .015 MAX.
4. MACHINED FILLET RADII .0150-.030.
5. MACHINED DIAMETERS ON A COMMON CENTERLINE CONCENTRIC WITHIN .005
6. PERPENDICULARITY & PARALLELISM OF MACHINED SURFACES .002 PER INCH, MAX .012 INCHES FOR SINGLE SURFACE.

DO NOT SCALE DRAWING

APPROVALS	DATE
DRAWN J. ERICKSON	
ENGINEER J. ERICKSON	
CHECKED	
PROJECT NO.	
PROJECT ZZZZZZZZ	
WEIGHT 0.231	

Monterey Bay Aquarium Research Institute
MBARI
7700 Sandholdt RD.
Moss Landing, CA 95039
PH: (831) 775-1700

PROJECT NAME
Zeiss Spectrometer

SIZE	DWG. NO.	REV.
B	20200713-MMS.UV-2385-760.DW	

SCALE 1:2	CAD FILE: MECH ENG ON TORNADO	SHEET 1 OF 1