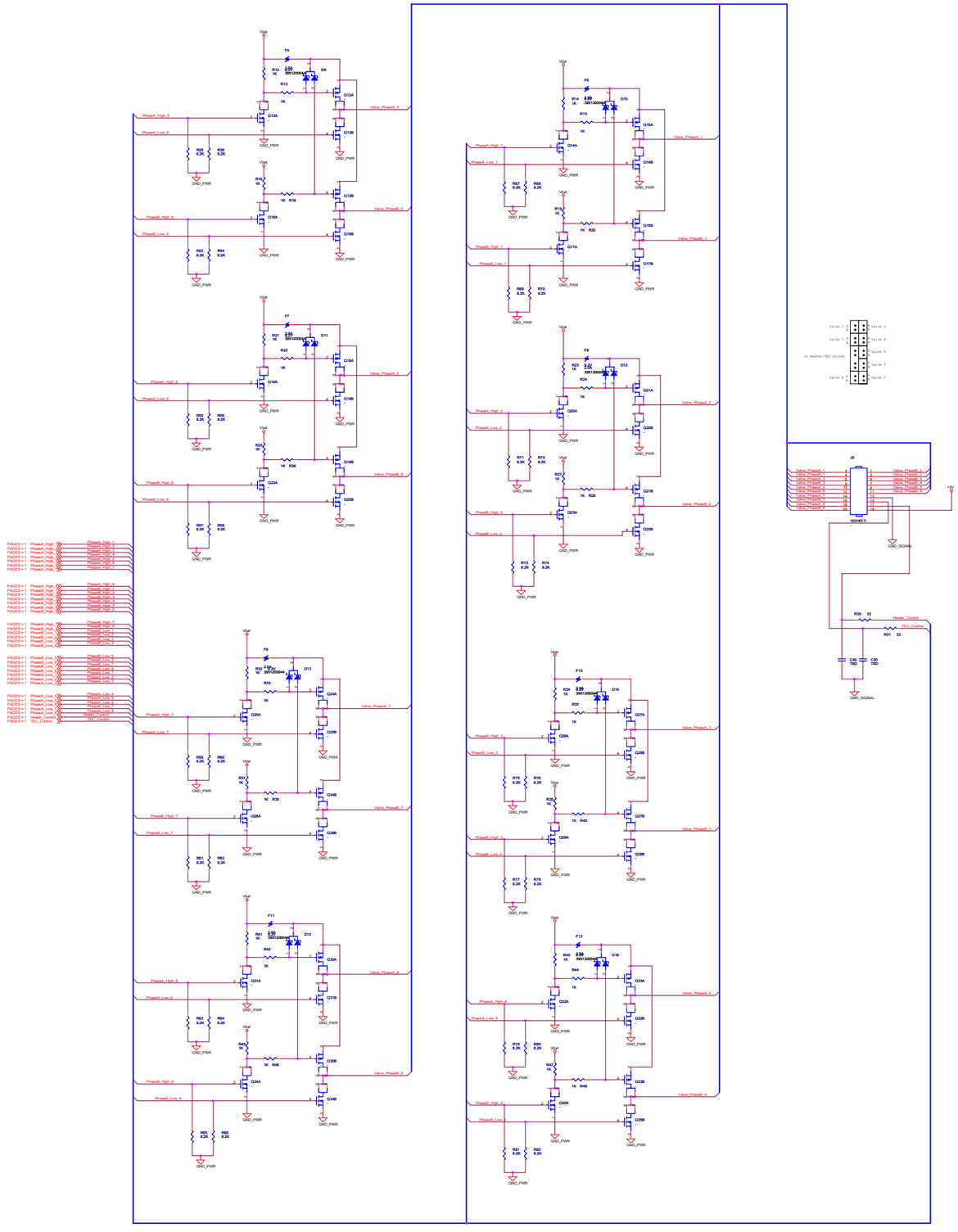

Title	<Title>
Size A	Document Number <Doc>
Rev	<Rev>
Date: Friday, January 28, 2005	Sheet 3 of 3