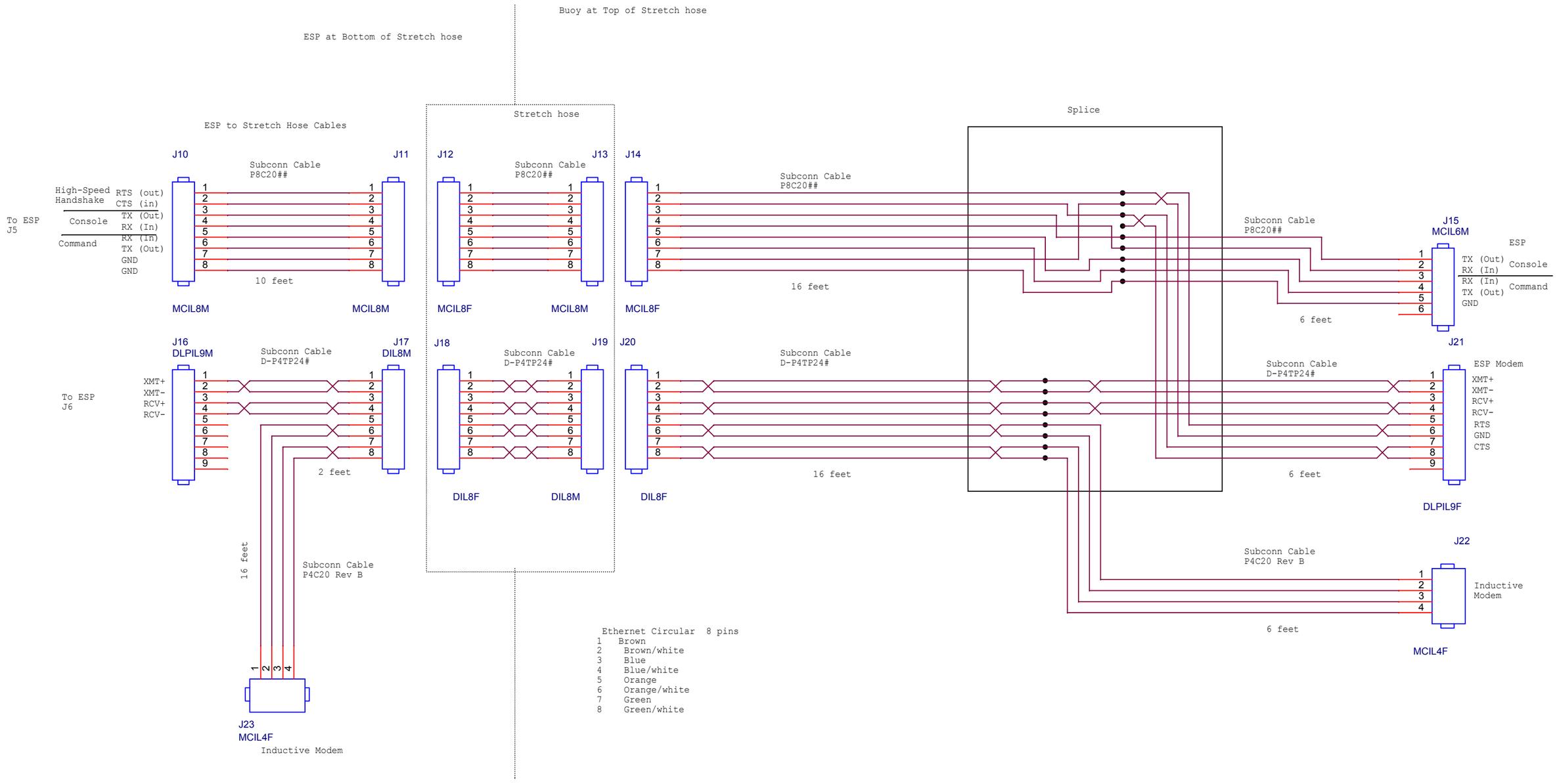

MONTEREY BAY AQUARIUM RESEARCH INSTITUTE
7700 SANDHOLDT ROAD
MOSS LANDING, CA 95039
(831) 775-1700 www.mbari.org
Copyright MBARI 2000

Title ESP Del Mar Mooring communications Stretch hose			Number <Doc>	
Size B	Engineer BRoman	Layout SJensen	Filename SanDiegoMooring.opj	Rev 3
	Date: Tuesday, October 20, 2015		Sheet 1 of 3	