Fluidic Worksheet --- Feb 19, 2008

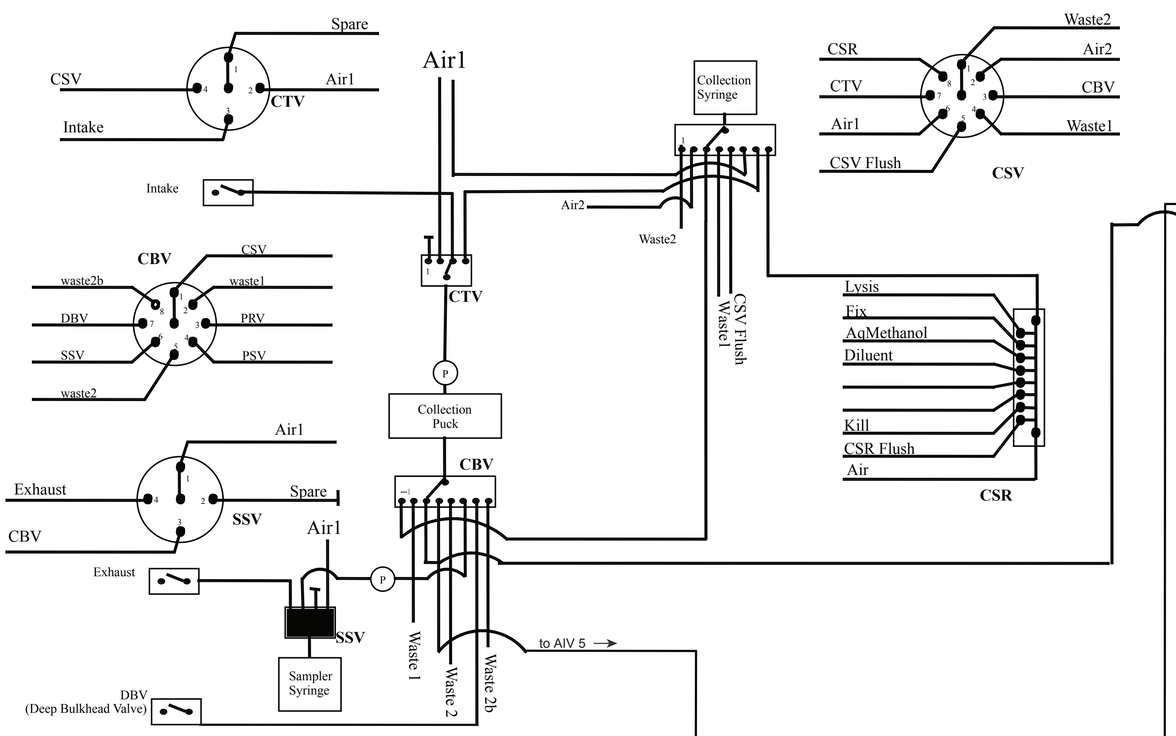

Fluidic Worksheet --- Feb 19, 2008

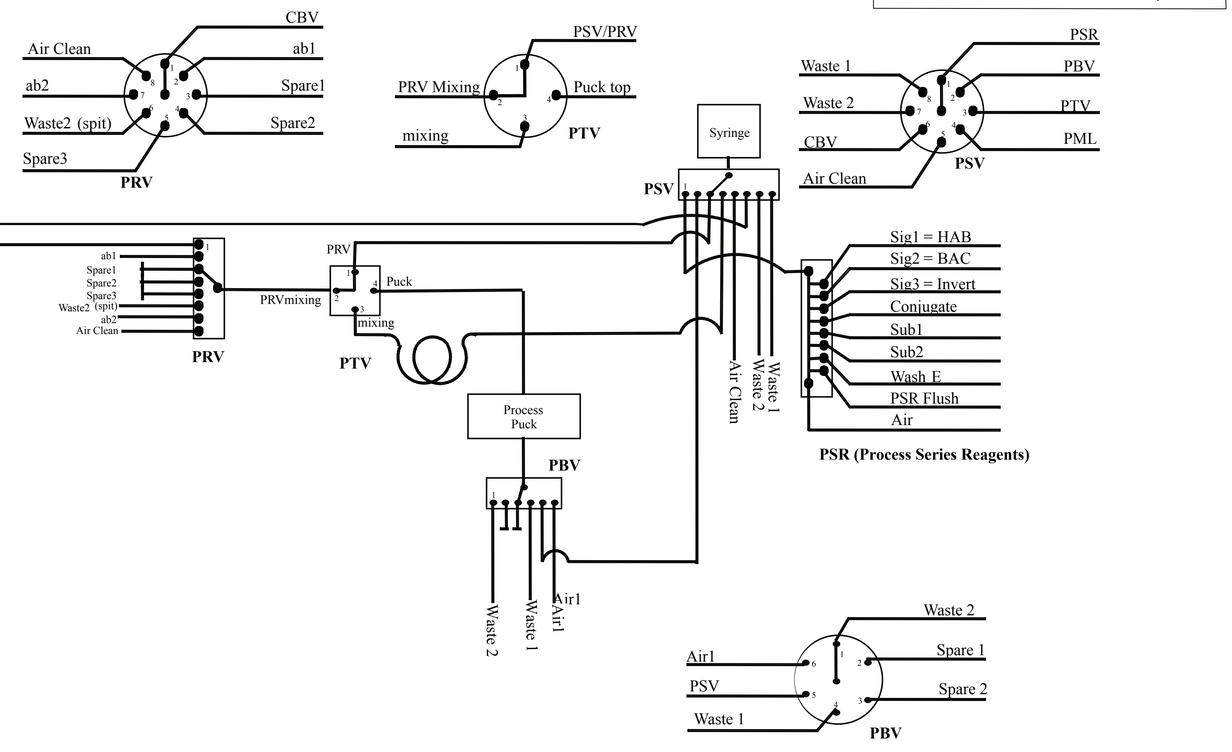

Micro-Fluidics Block/PCR

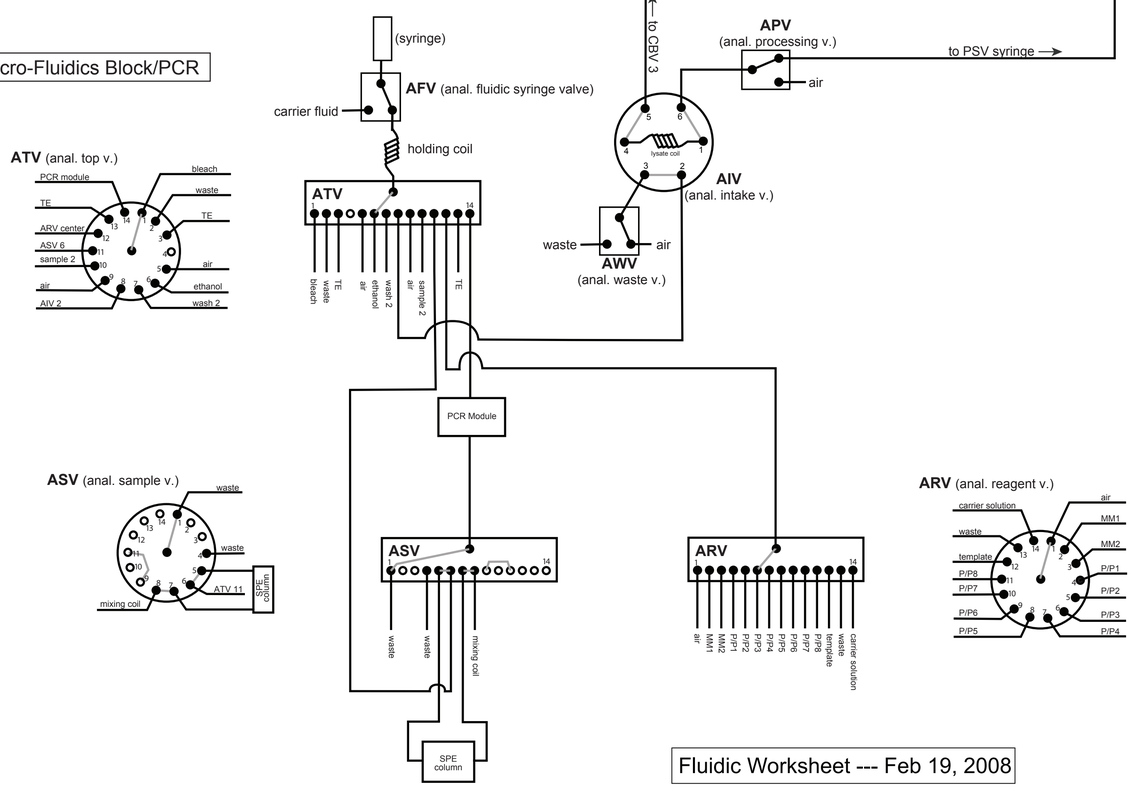

Fluidic Worksheet --- Feb 19, 2008