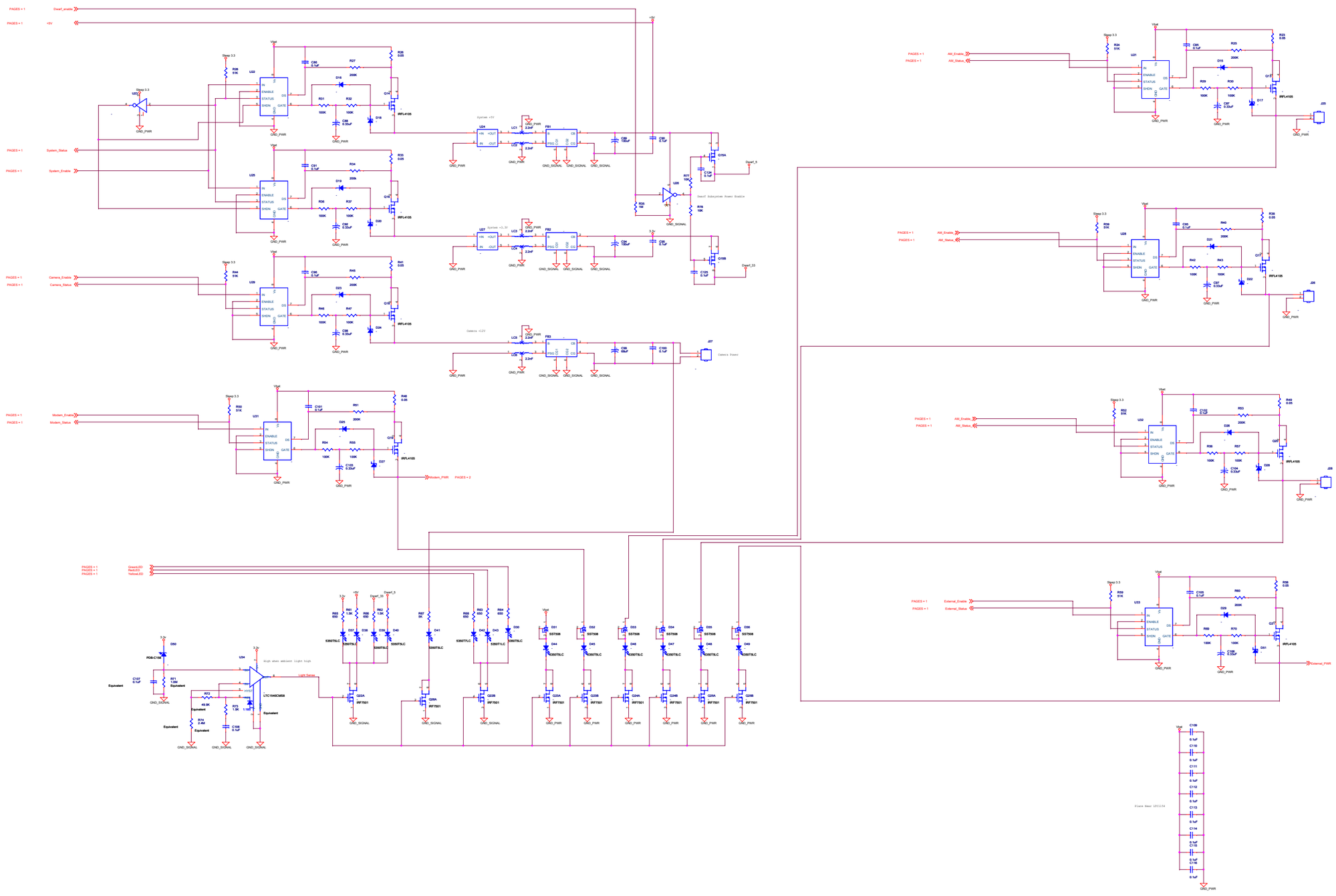

MONTEREY BAY AQUARIUM RESEARCH INSTITUTE
7700 SANDHOLDT ROAD
MOSS LANDING, CA 95039
(831) 775-1700 www.mbari.org

Associate Mbari 2000

Title: Sleepy			Number: <Doc>
Size: B	Engineer: Scott Jensen	Project: <Layout Eng.>	Revision: Sleepy
	Date: Monday, March 24, 2003	Sheet 3 of 4	0.0.3