17H2041-120-4AL-PG26.9-MAR-001 REV00

CE RoHS

DINGS' MOTION USA
DATE CODE

REVISION			
REV.	DATE	DESCRIPTION	DRAWN BY

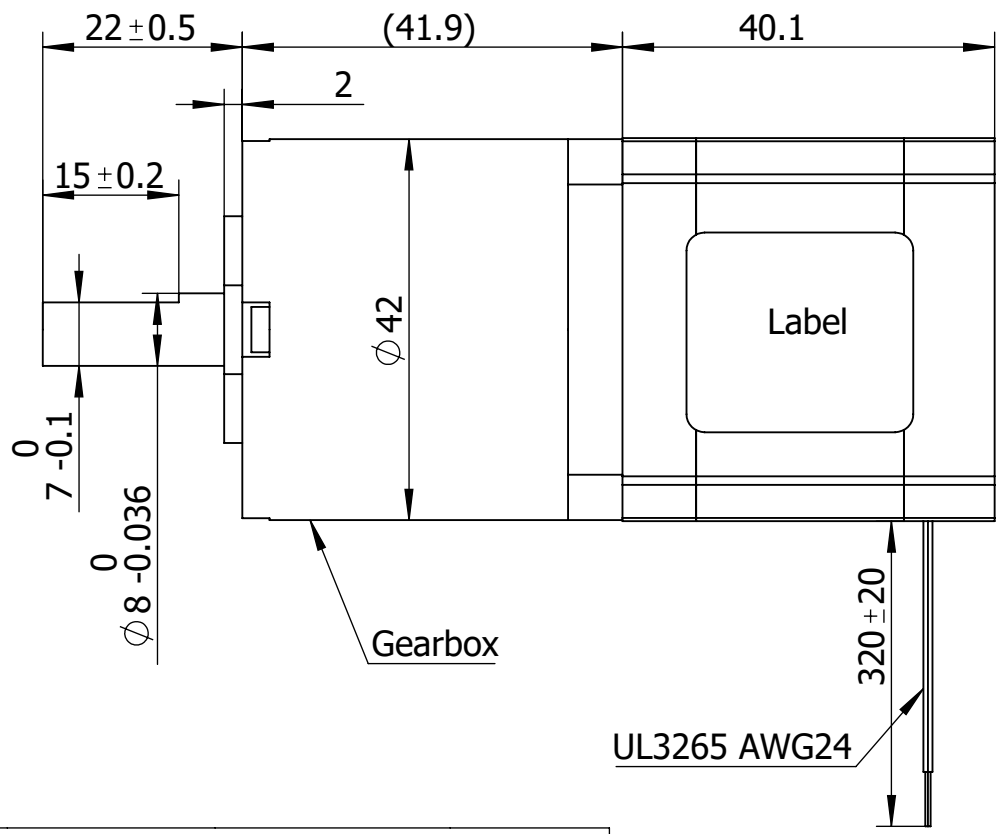

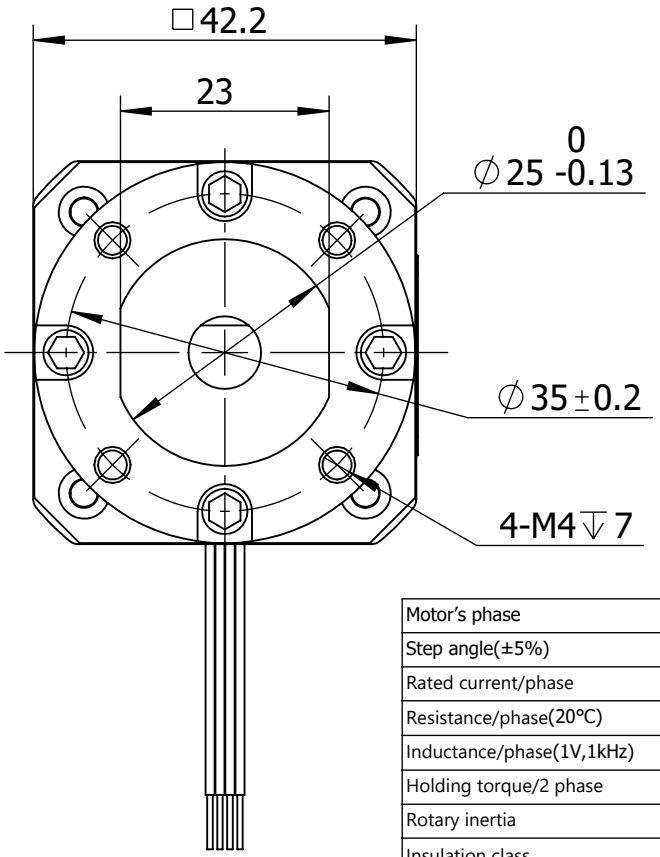

Motor's phase	2
Step angle(±5%)	1.8°
Rated current/phase	1.2 A(RMS)
Resistance/phase(20°C)	2.4 Ω±10%
Inductance/phase(1V,1kHz)	4.7 mH±20%
Holding torque/2 phase	0.4 N.m
Rotary inertia	54 g.cm^2
Insulation class	B
Insulation resistance	100MΩ(500VDC)
Heat rise	80°C
Motor weight	0.3 Kg

Gearbox			
Ratio	Rated torque	Ultimate torque	Efficiency
26.9	2N.m	6N.m	81%

CUSTOMER

WIRING CHART

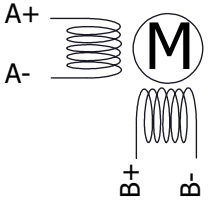

EXCITATION SEQUENCE

CW	→			
Red A+	+		–	
Red/wht A-	–		+	
Grn B+		+		–
Grn/wht B-		–		+
CCW	←			

NOTICE TO PERSONS RECEIVING THIS DRAWING
THIS DRAWING IS ONLY CONDITIONALLY ISSUED, AND FOR THE SOLE PURPOSE OF INFORMING LICENSEES AND ASSOCIATE CONTRACTORS OF DINGS' MOTION, AND VENDORS THERETO AND CUSTOMERS THEREOF, RECEIPT OR POCESSION THEREOF DOES NOT CONFER TO TRANSFER ANY RIGHT IN THE SUBJECT MATTER OF THE DRAWING. THE DESIGN, CONSTRUCTION, TECHNICAL INFORMATION AND ALL OTHER SUBJECT MATTER SHOWN AND ASSOCIATE CONTRACTORS OF SAID CORPORATION AND ONLY FOR LICENSED MANUFACTURE, AND BY VENDORS MANUFACTURING FOR SAID CORPORATION AND ONLY FOR LICENSEES AND ASSOCIATECONTRACTORS.

UNLESS OTHERWISE SPECIFIED ALL DIMENSIONS ARE IN MILLIMETERS AND TOLERANCES ARE AS BELOW PER ISO2768-cK.

LINEAR		ANGULAR	
0 ~ 3	±0.2	0 ~ 10	±15′
3 ~ 6	±0.5	10 ~ 50	±30′
6 ~ 30	±0.8	50 ~ 120	±1°
30 ~ 120	±1.5	120 ~ 400	±1.5°

DRAWN	Lei	DATE	2023/12/15
APPRVD		DATE	
MODEL	17H2041-120-4AL-PG26.9-MAR-001		

DINGS' MOTION USA.
....Precision Motion Specialists

SIZE	A3	SHEET	1 OF 1
SCALE	1 : 1	REV	00