REVISION				
ZONE	REV	DESCRIPTION	DATE	APP

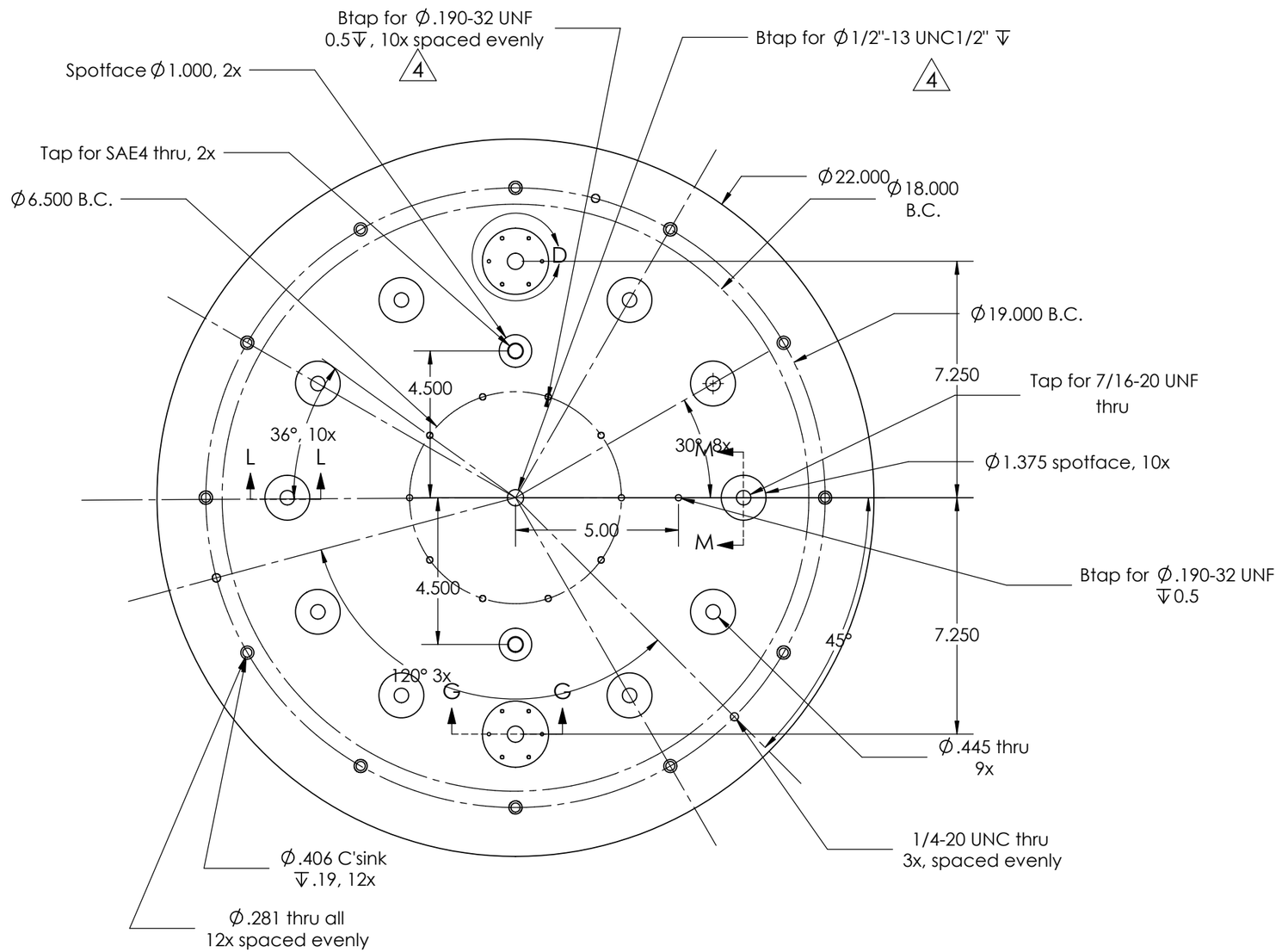

Notes:
1. Material is 6061-T6 Al
2. Break all sharp edges
3. Hard anodize per MIL-A-8625, Type 3 w/ dichromate seal. Surface buildup .0006" to .0008".
4. Indicated anodized tapped holes to be tapped over sized so as to meet thread class tolerance after anodize.
5.
6. O-ring groove depth to be held after anodize.
7. Mask indicated area from anodize
8. Design depth is 4000m for this end cap
9. Approx. weight: 160 lbs

For quotation purposes only
Date: 6/1/05

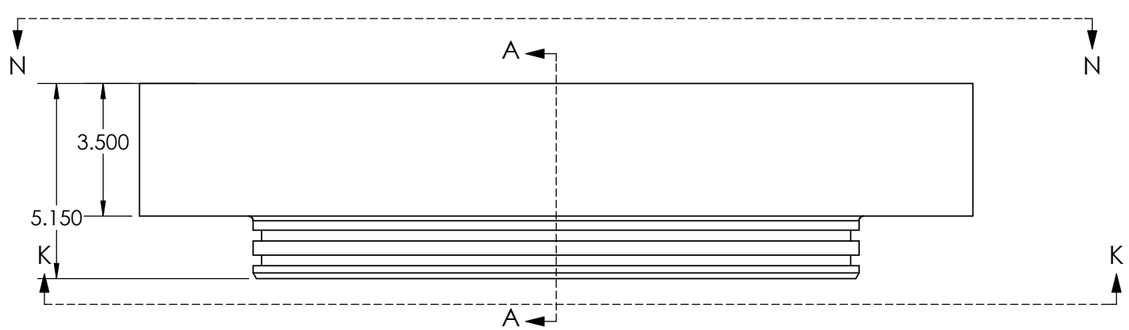

UNLESS OTHERWISE SPECIFIED:		NAME	DATE
DIMENSIONS ARE IN INCHES TOLERANCES: FRACTIONAL ± 1/8" ANGULAR: MACH ±1deg BEND ±1 TWO PLACE DECIMAL ±.010 THREE PLACE DECIMAL ±.005	DRAWN	M. Greise	27Feb05
	CHECKED		
	ENG APPR.		
	MFG APPR.		
INTERPRET GEOMETRIC TOLERANCING PER:	Q.A.		
MATERIAL Aluminum 6061-T6	COMMENTS:		
FINISH			
DO NOT SCALE DRAWING			

Mark Greise Engineering

TITLE: TOP End Cap Deep Water ESP Housing

SIZE	DWG. NO.	REV
B	MG-05-310	

SCALE: 1:2 | SHEET 1 OF 3

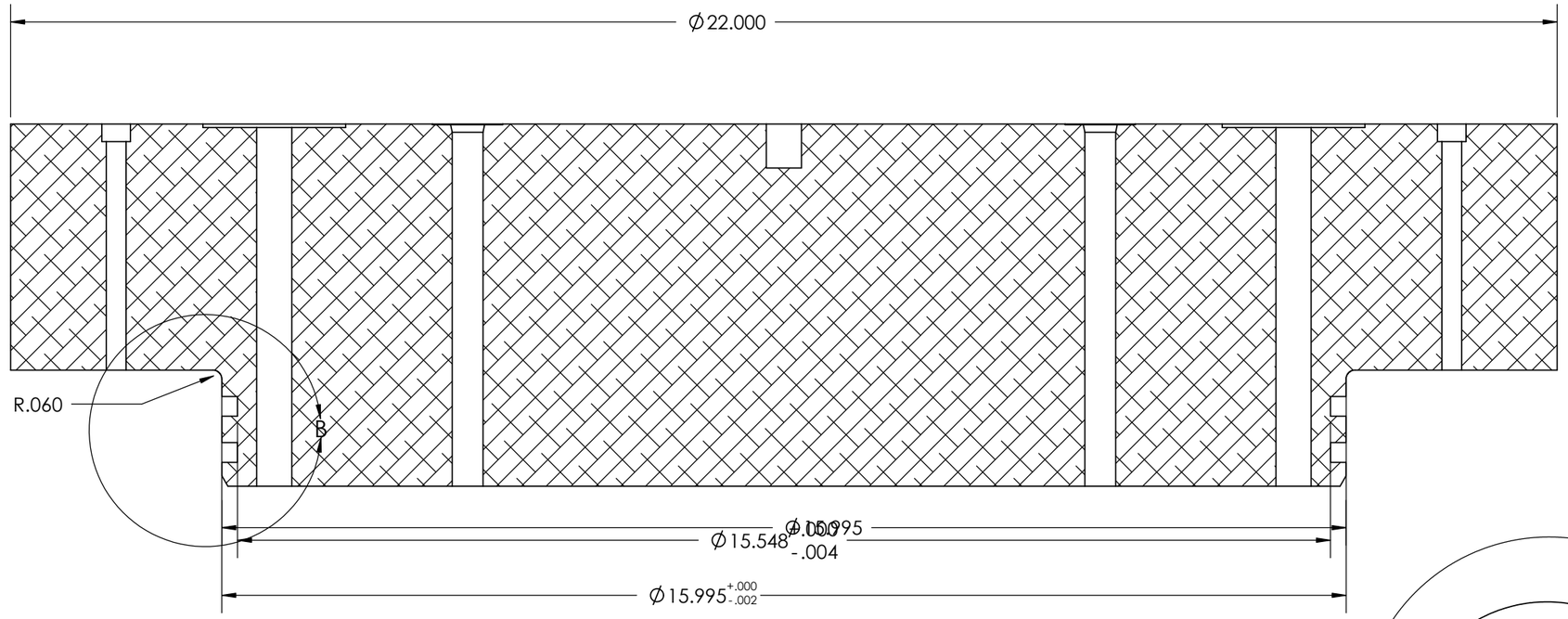

SECTION A-A
SCALE 1 : 2

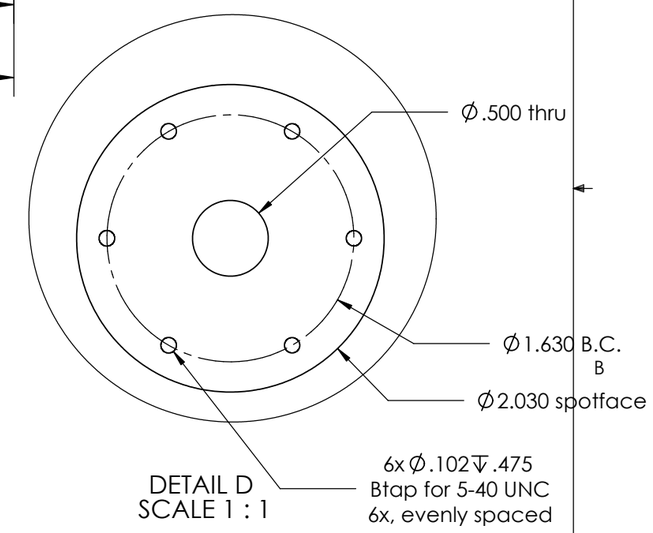

DETAIL D
SCALE 1 : 1

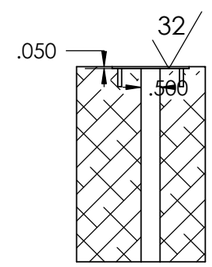

SECTION G-G
SCALE 1 : 4

Cutout for 7/16" thread on connectors
and backing nut
9x

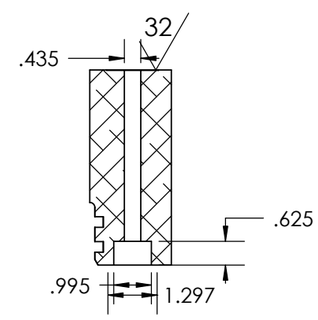

SECTION L-L
SCALE 1 : 4

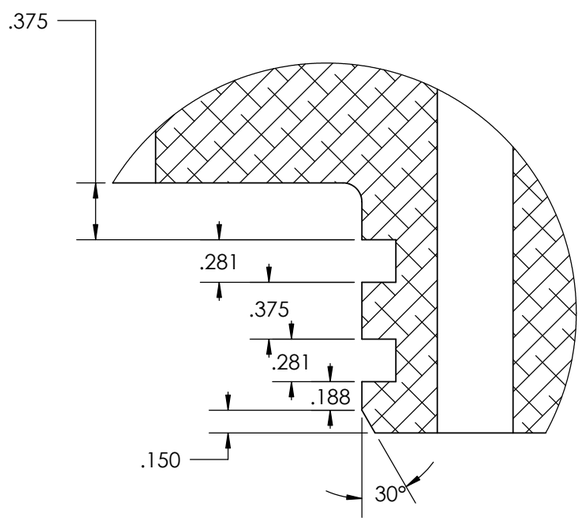

DETAIL B
SCALE 1 : 1

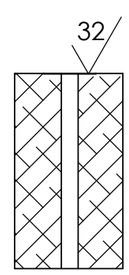

Tapped hole for straight connector
1x

SECTION M-M
SCALE 1 : 4

SIZE	DWG. NO.	REV
B	MG-05-310	
SCALE: 1:5		SHEET 2 OF 3

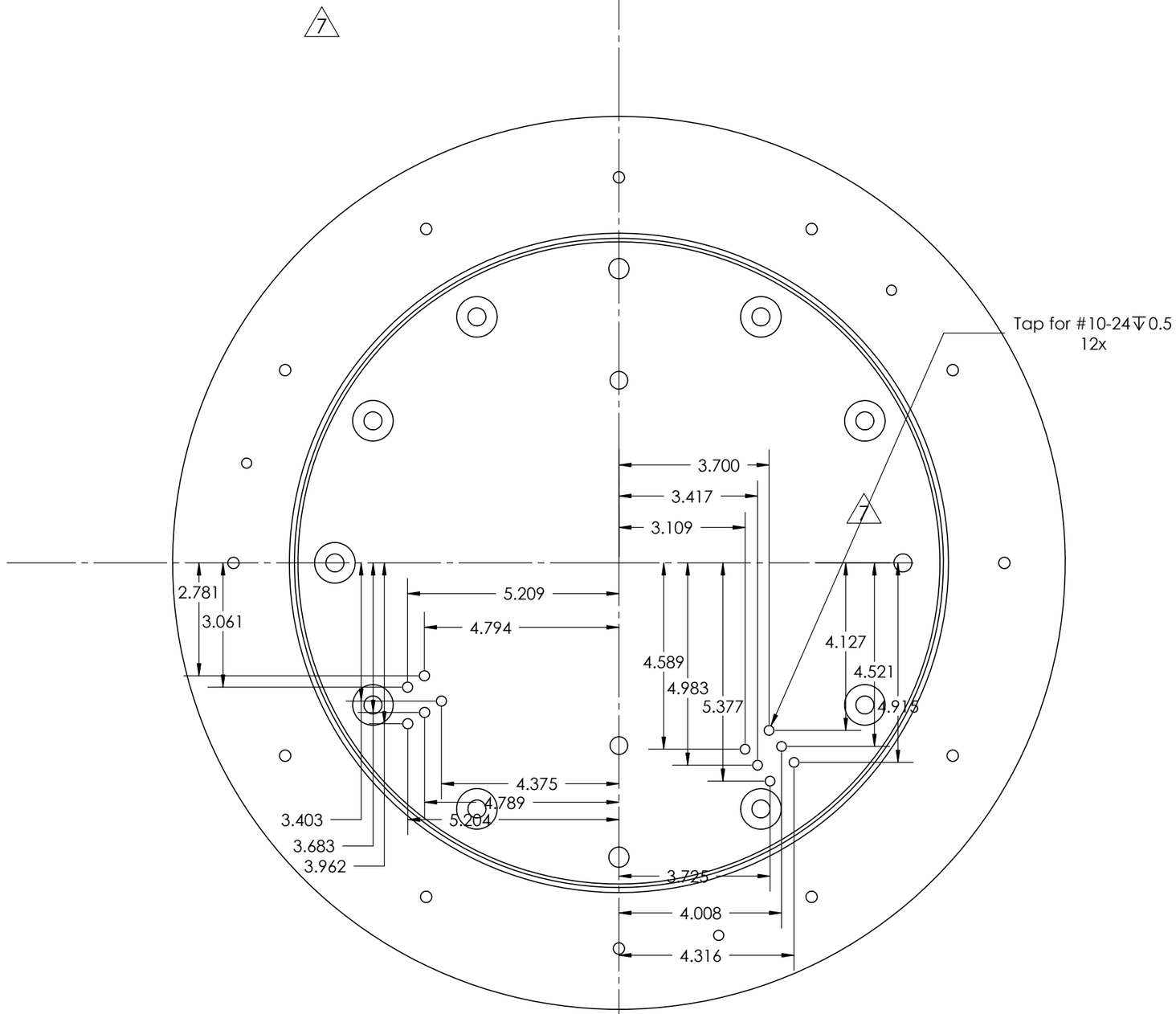

INSIDE MOUNTING HOLES FOR ESP CHASSIS
AND SOLENOID BRACKETS

SECTION K-K
SCALE 1 : 3

SIZE	DWG. NO.	REV
B	MG-05-310	
SCALE: 1:5		SHEET 3 OF 3