VICOR CONFIDENTIAL
THIS DOCUMENT AND THE DATA DISCLOSED HEREIN OR HEREWITH IS NOT TO BE REPRODUCED, USED, OR DISCLOSED IN WHOLE OR IN PART TO ANYONE WITHOUT PERMISSION OF VICOR CORP.

| REV. | DESCRIPTION | | DATE | APVD |
|---|---|---|---|---|
| e1 | RELEASED FOR DEVELOPMENT | DPK | 06/10/02 | GCK |

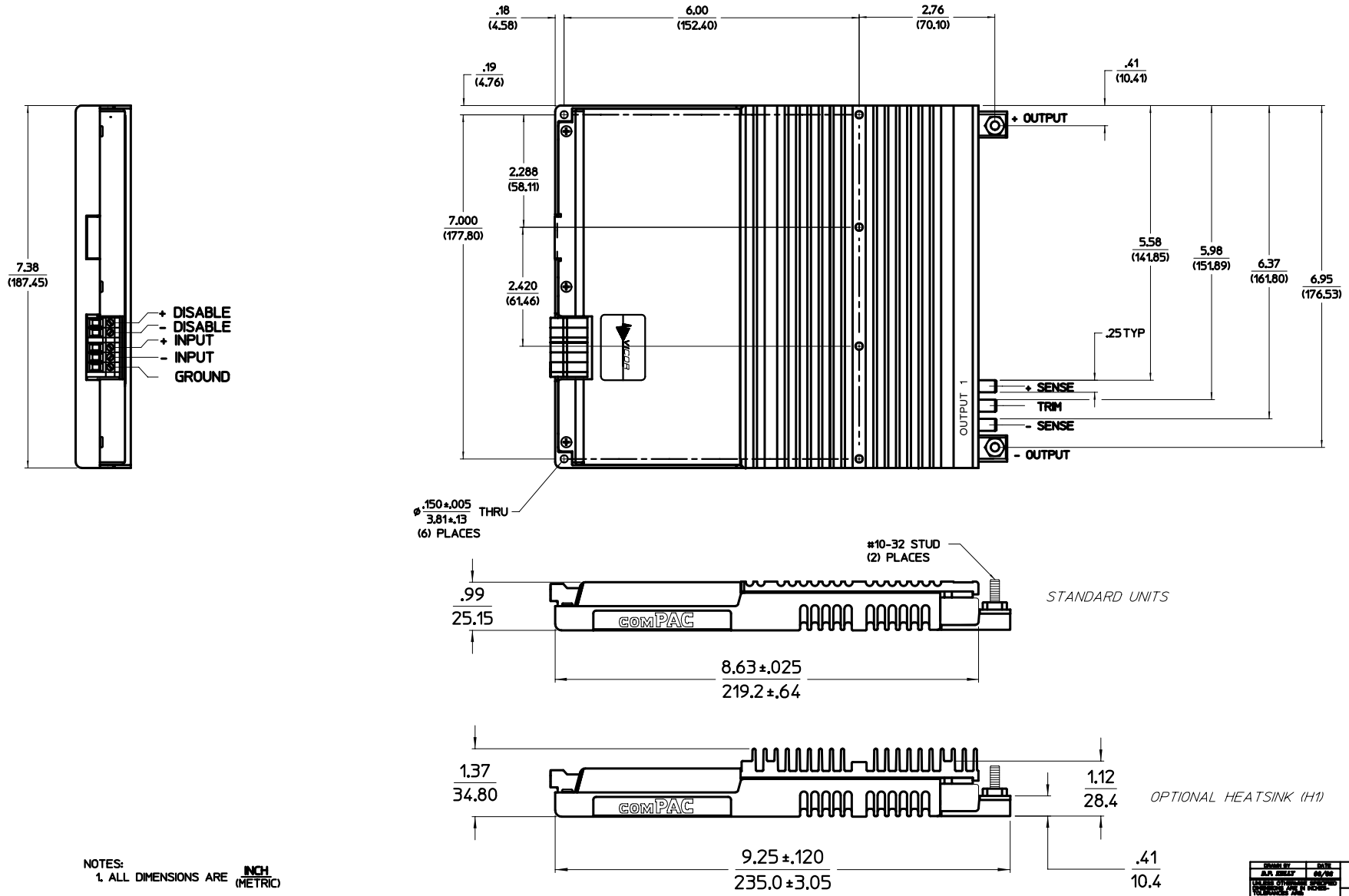


NOTES:
1. ALL DIMENSIONS ARE INCH (METRIC)

| | | | |
|---|---|---|---|
| DRAWN BY A.P. ZIELLY | DATE 06/02 | VICOR | |
| UNLESS OTHERWISE SPECIFIED DIMENSIONS ARE IN INCHES TOLERANCES ARE FRACTIONS ±1/64 DECIMALS .XX ±.01 .XXX ±.005 ANGLES ±1° | | OUTLINE DRAWING 3 UP COMPAC "N" | |
| THIRD ANGLE PROJECTION | SIZE D | PITCH NO. 67131 | DWG NO 25351 REV #1 |
| DO NOT SCALE DRAWING | SCALE | | SHEET 1 OF 1 |