THE INFORMATION CONTAINED IN THIS DRAWING IS THE SOLE PROPERTY OF MBARI ANY REPRODUCTION IN PART OR WHOLE WITHOUT THE WRITTEN PERMISSION OF MBARI IS PROHIBITED.

REVISIONS			
REV.	DESCRIPTION	DATE	APPROVED
	INITIAL RELEASE		

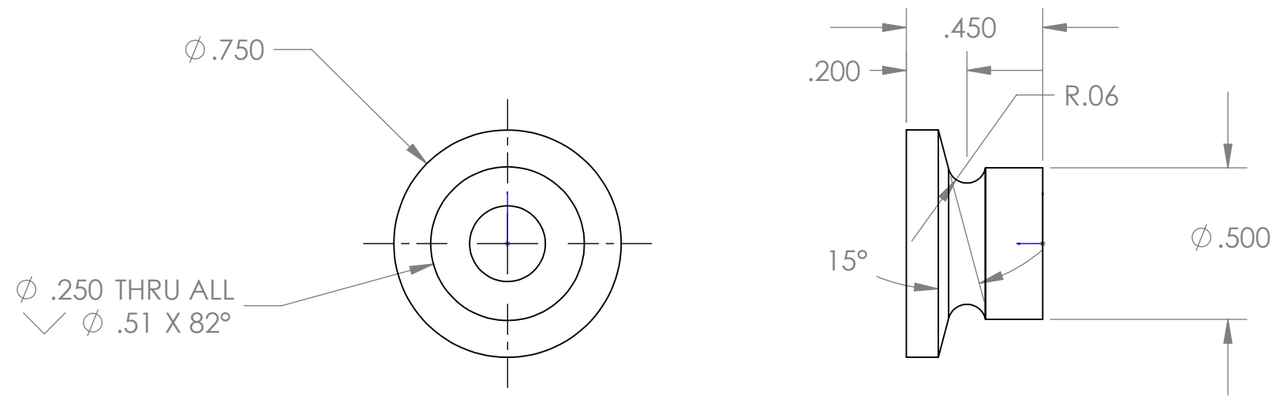

SHORT

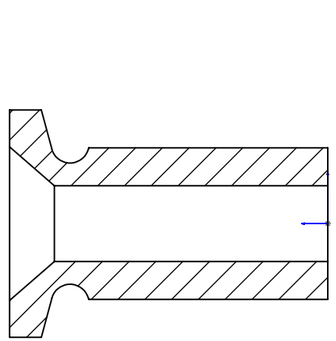

SECTION A-A
SCALE 2 : 1

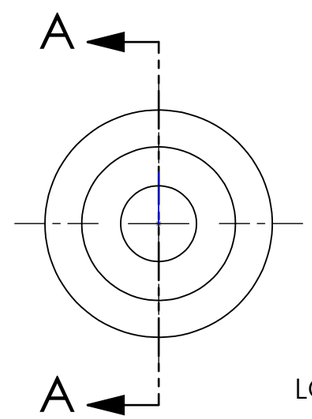

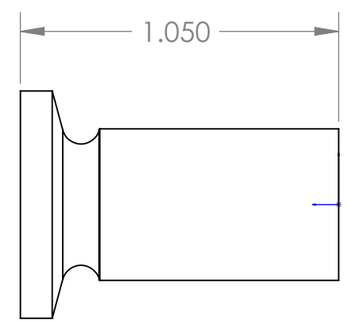

LONG

NOTES
1. MATL IS DELRIN
2. QTY 2 EA

BILL OF MATERIALS

NEXT ASSY Description	NEXT ASSY Number

THIRD ANGLE PROJECTION

UNLESS OTHERWISE SPECIFIED TOLERANCES ARE:

1 PLACE DIM	2 PLACE DIM	3 PLACE DIM	ANGLES
±1/16	±.02	±.005	±1°

1. DIMENSIONS ARE IN INCHES
2. DIMENSION LIMITS HELD AFTER PLATING.
3. REMOVE BURRS AND SHARP EDGES .015 MAX.
4. MACHINED FILLET RADII .0150-.030.
5. MACHINED DIAMETERS ON A COMMON CENTERLINE CONCENTRIC WITHIN .005
6. PERPENDICULARITY & PARALLELISM OF MACHINED SURFACES .002 PER INCH. MAX .012 INCHES FOR SINGLE SURFACE.

DO NOT SCALE DRAWING

APPROVALS	DATE
DRAWN pargett	2/3/2010
ENGINEER	
CHECKED	
PROJECT NO. 900915	
PROJECT	
WEIGHT	

Monterey Bay Aquarium Research Institute
MBARI
7700 Sandholdt RD.
Moss Landing, CA 95039
PH: (831) 775-1700

4k ESP Release Pin

SIZE	DWG. NO.	REV.
B	200835	REV

SCALE 4:1 | CAD FILE: | SHEET 1 OF 1

Status: