Project Name:	
Date:	
Designer:	

ADM7171 - 6.5 V, 1 A, Ultralow Noise, High PSRR, Fast Transient Response CMOS LDO

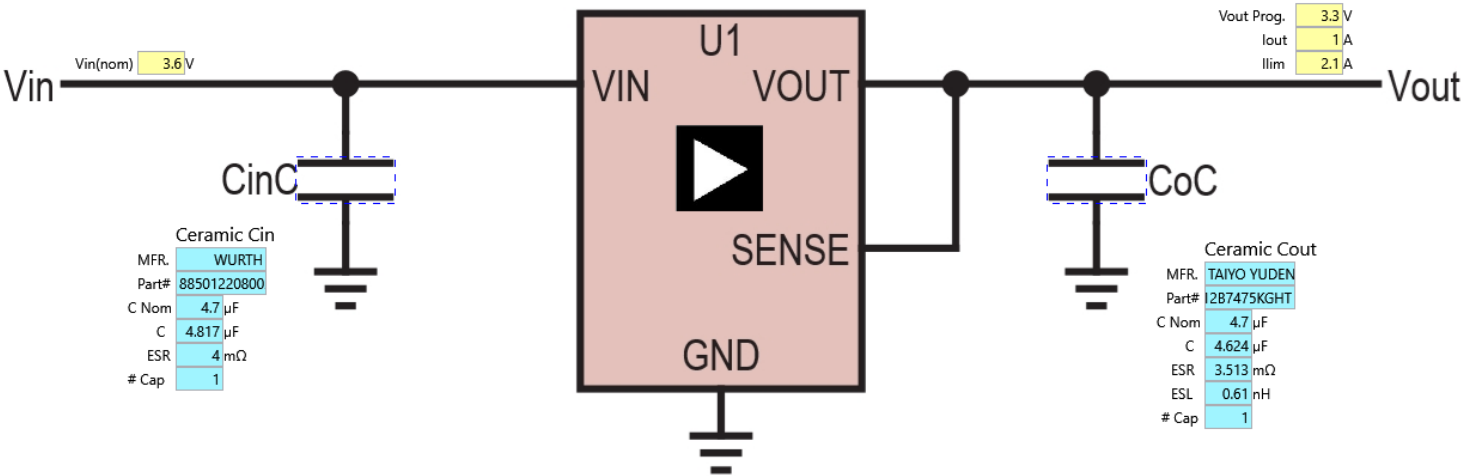

Ceramic Cin

MFR.	WURTH	
Part#	88501220800	
C Nom	4.7	µF
C	4.817	µF
ESR	4	mΩ
# Cap	1	

Ceramic Cout

MFR.	TAIYO YUDEN	
Part#	12B7475KGHT	
C Nom	4.7	µF
C	4.624	µF
ESR	3.513	mΩ
ESL	0.61	nH
# Cap	1	

LFCSP-8

Ta	25	C	θJA	56.4	C/W
			Max Junction Temp.	125	C
Efficiency @ Vin Nom.	92	%	Efficiency @ Vin Max.	87	%
PLoss @ Vin Nom.	0.3	W	PLoss @ Vin Max.	0.5	W
Tj-Ta @ Vin Nom.	16.92	C	Tj-Ta @ Vin Max.	28.2	C
Tj @ Vin Nom.	41.92	C	Tj @ Vin Max.	53.2	C