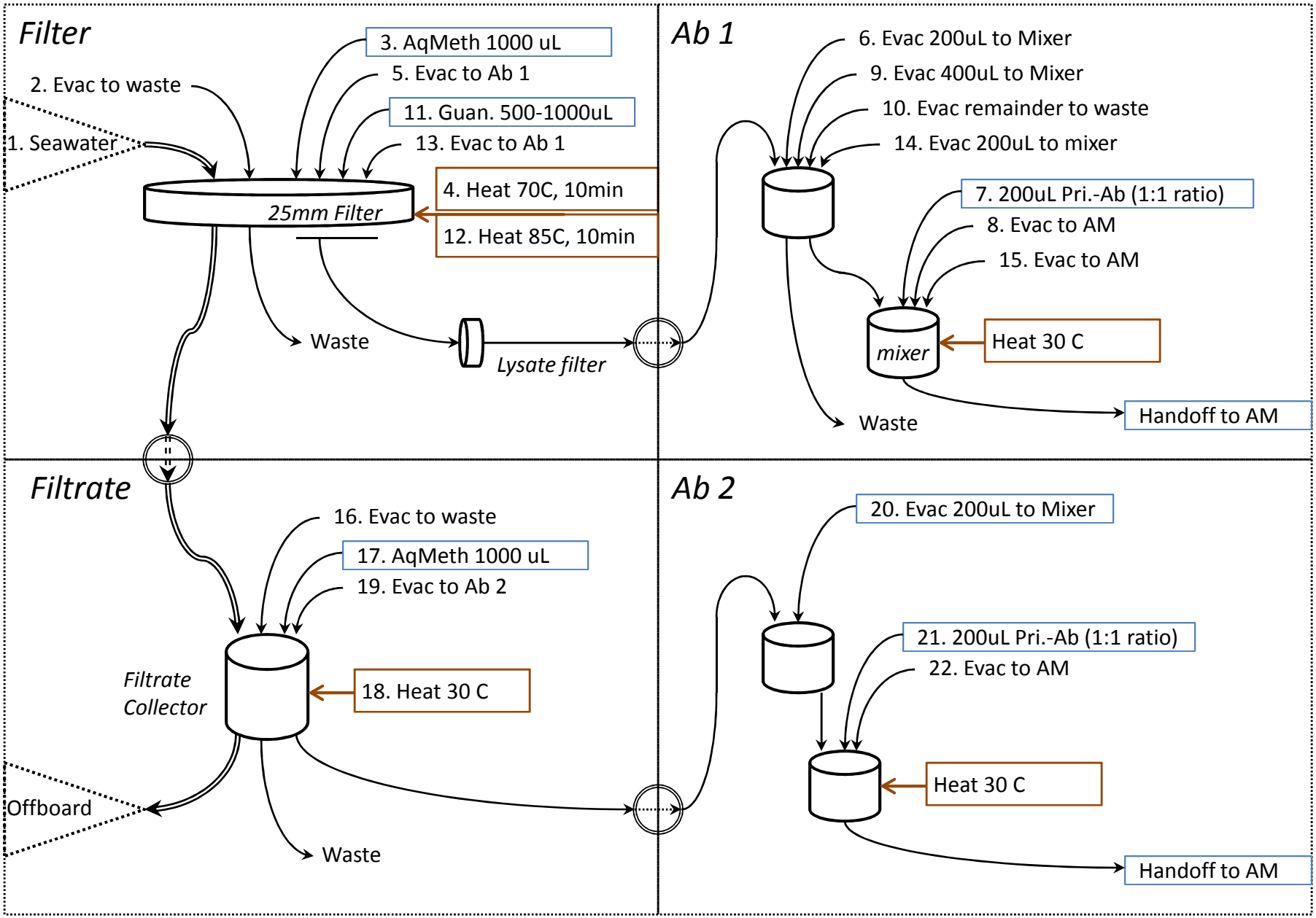G3 HAB, Domoic Acid: Modular Cartridge. Ver: 0.1