REVISIONS				
ZONE	REV.	DESCRIPTION	DATE	APPROVED
	1	INITIAL RELEASE		
	2	CHANGE FINISH, ADD HOLES	1/29/2014	

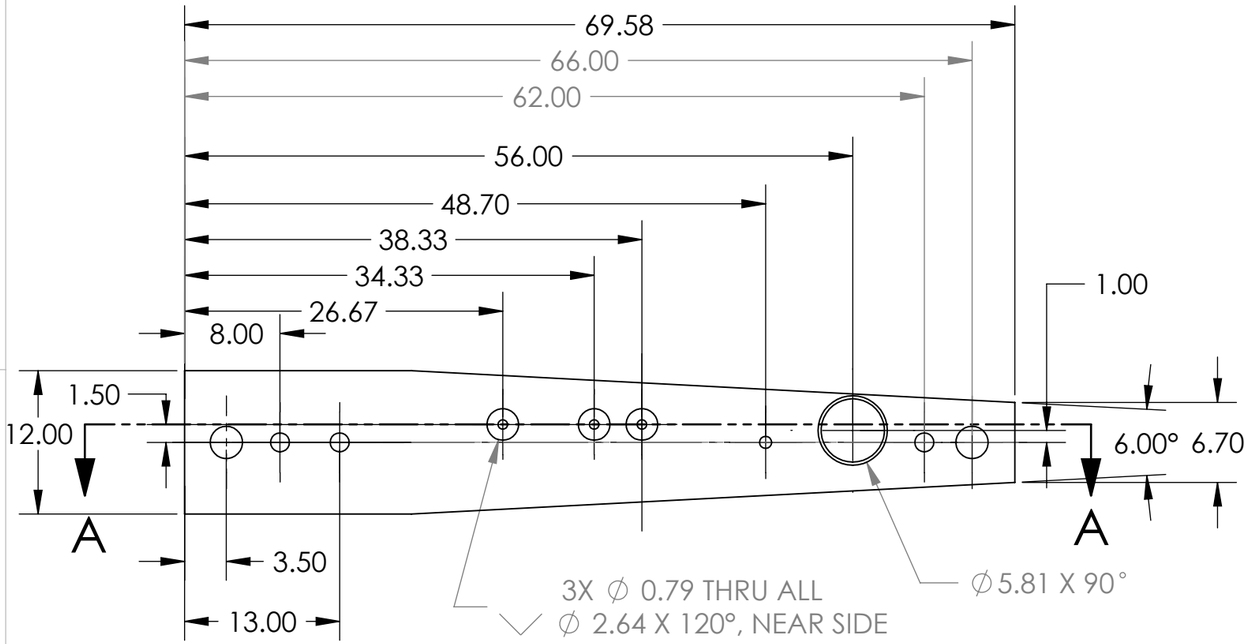

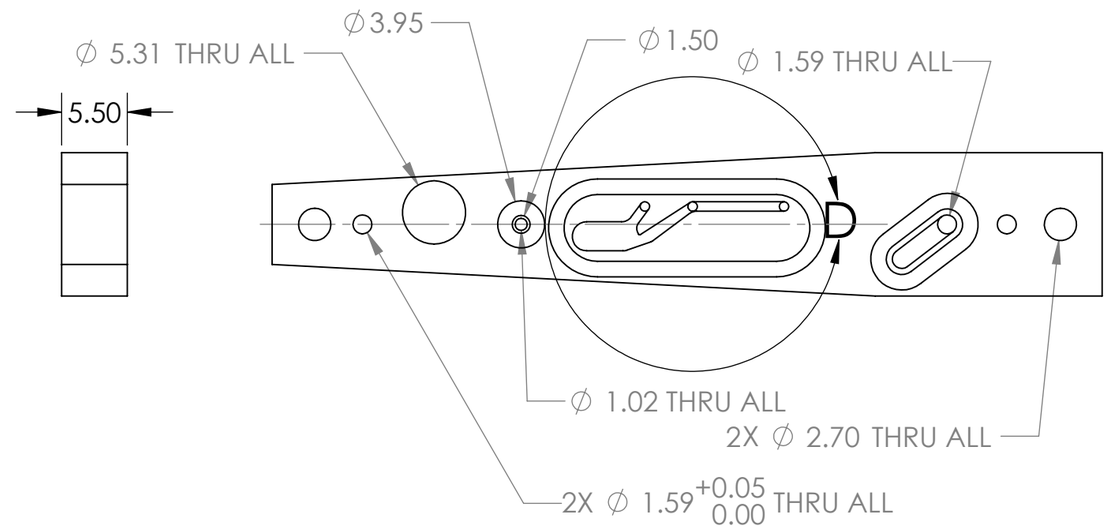

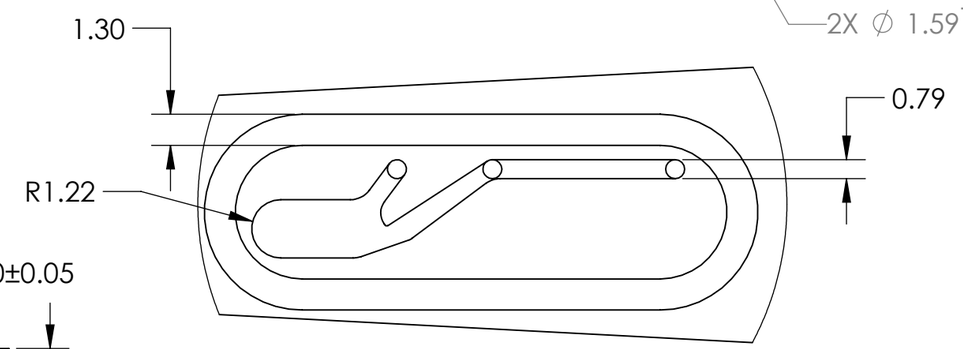

DETAIL D
SCALE 4 : 1

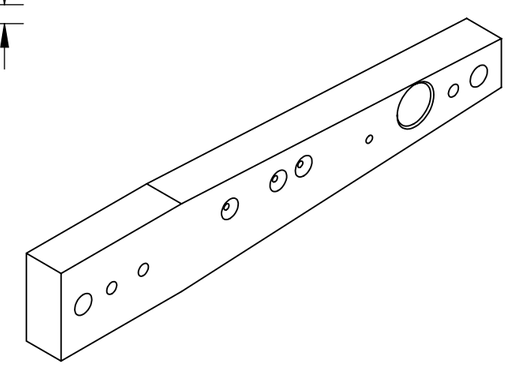

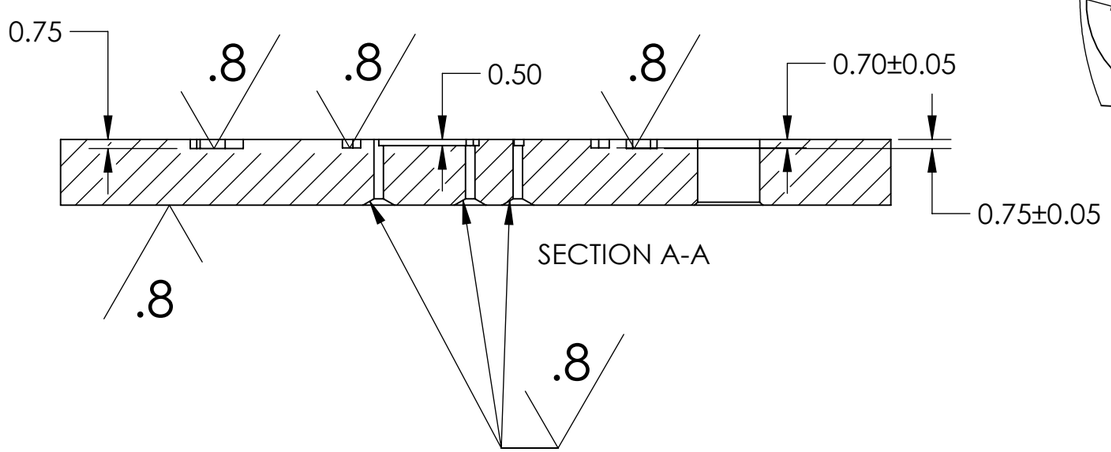

SECTION A-A

NOTES (UNLESS OTHERWISE SPECIFIED):
1. DEBURR AND BREAK SHARP EDGES
2. FINISH: SEE CALLOUTS
3. MATERIAL: POLYCARBONATE

PROPRIETARY AND CONFIDENTIAL

THE INFORMATION CONTAINED IN THIS DRAWING IS THE SOLE PROPERTY OF ACCEL BIOTECH INC.. ANY REPRODUCTION IN PART OR AS A WHOLE WITHOUT THE WRITTEN PERMISSION OF ACCEL BIOTECH INC. IS PROHIBITED.

UNLESS OTHERWISE SPECIFIED:
DIMENSIONS ARE IN MM
TOLERANCES:
ANGULAR: MACH ±.5° BEND ±1°
ONE PLACE DECIMAL ± .25
TWO PLACE DECIMAL ± .12
INTERPRET GEOMETRIC TOLERANCING PER: ASME Y14.5M
MATERIAL SEE NOTES
FINISH SEE NOTES

	NAME	DATE
CHECKED BY	-	-

Accel Biotech Inc.

TITLE:
WEDGE, SYRINGE MANIFOLD

SIZE	DWG. NO.	REV
B	1001-0005	2

SCALE: 2:1 WEIGHT: KG SHEET 1 OF 1