SIZE	PART NUMBER	SHEET	REV
D		1	01

REVISIONS				
REV	ECO#	DESCRIPTION	DATE	ENGINEER
01		INITIAL RELEASE	27-SEP-2019	WL

NOTES: (UNLESS OTHERWISE SPECIFIED)

1. INTERPRET DIMENSIONS AND TOLERANCES PER ASME Y14.5M-1994.
2. DIMENSIONS: ALL DIMENSIONS ARE IN INCHES.
3. MATERIAL: SS (303)
4. FINISH: 32 uINCH (0.8 um) Ra MAX WHERE INDICATED
5. REMOVE ALL BURRS AND BREAK SHARP EDGES.
6. THIS DRAWING SHOWS ONLY ENGINEERING CRITICAL TO FUNCTION DIMENSIONS AND DIMENSIONS FOR ONGOING QC INSPECTION (CIRCLED DIMENSIONS). THESE DIMENSIONS ARE TO BE CONTROLLED BY THE DRAWING TOLERANCE BLOCK UNLESS OTHERWISE SPECIFIED.
7. ALL OTHER NON-DIMENSIONED FEATURES ARE TO BE CONTROLLED BY THE CAD DATABASE.
   FILENAME: BB_REDUCER_0500NPT_10-32
   REVISION: 01

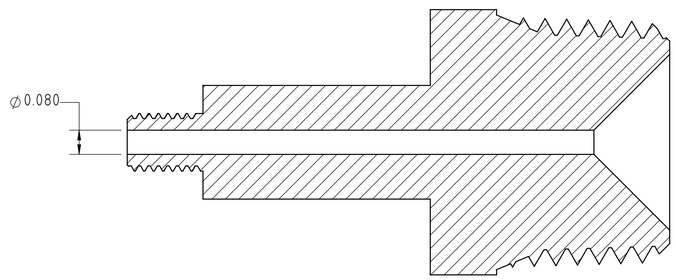

SECTION B-B

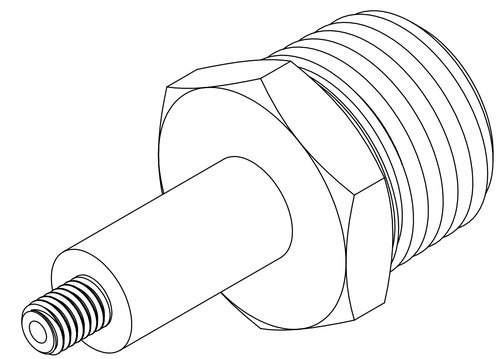

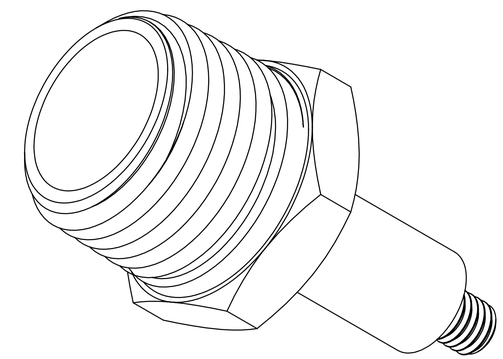

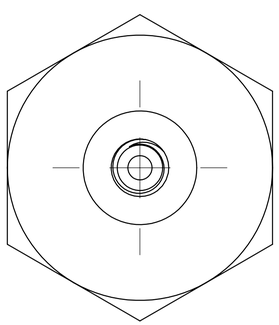

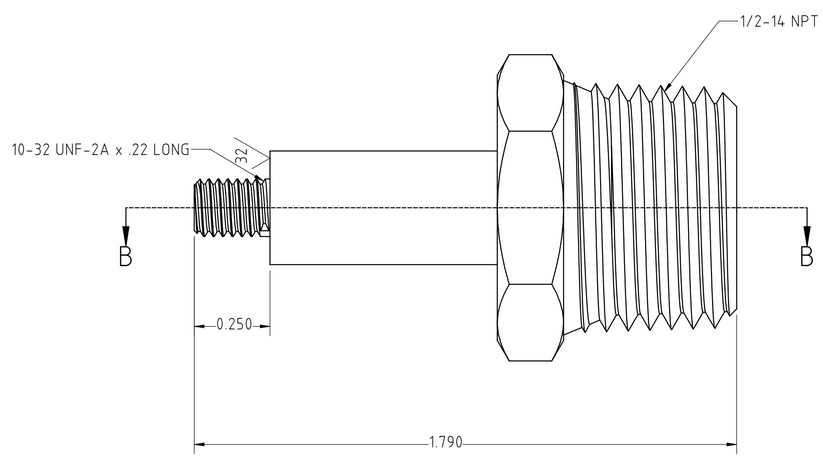

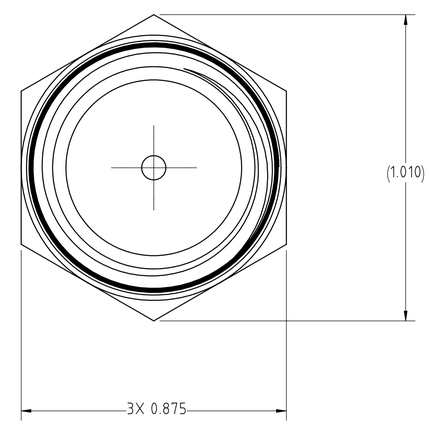

THIRD ANGLE PROJECTION

UNLESS OTHERWISE SPECIFIED	SIGNATURES	DATE	FUNCTION ENGINEERING, INC
DIMENSIONS ARE IN INCHES .XX ± 0.008 .XXX ± 0.004 .XXXX ± 0.002 ANGLES ± 0.5 DEG NON-DIMENSIONED FEATURES: ⌓ 0.02	DRAWN CHECKED ENGR		WWW.FUNCTION.COM BB REDUCER 1/2" NPT MALE 10-32 MALE
	THIS DOCUMENT AND THE TECHNICAL DATA DISCLOSED ARE PROPRIETARY AND SHALL NOT BE DUPLICATED, USED, RELEASED OR DISCLOSED WITHOUT EXPRESSED WRITTEN PERMISSION.		
MATERIAL: SEE NOTE / FINISH: SEE NOTE	DO NOT SCALE DRAWING		SIZE: D / DRAWING NUMBER / REV: 01
CAD FILE: BB_REDUCER_0500NPT_10-32			SCALE: 4:1 / SHEET 1 OF 2