| SIZE | PART NUMBER | SHEET | REV |
|---|---|---|---|
| D | | 1 | 01 |

| REVISIONS | | | | |
|---|---|---|---|---|
| REV | ECO# | DESCRIPTION | DATE | ENGINEER |
| 01 | | INITIAL RELEASE | 27-SEP-2019 | WL |

NOTES: (UNLESS OTHERWISE SPECIFIED)

1. INTERPRET DIMENSIONS AND TOLERANCES PER ASME Y14.5M-1994.
2. DIMENSIONS: ALL DIMENSIONS ARE IN MILLIMETERS.
3. MATERIAL: 1) PEEK 2) TITANIUM (GRADE 2)
4. FINISH: 0.8 MICRON Ra MAX WHERE INDICATED
5. REMOVE ALL BURRS AND BREAK SHARP EDGES.
6. THIS DRAWING SHOWS ONLY ENGINEERING CRITICAL TO FUNCTION DIMENSIONS AND DIMENSIONS FOR ONGOING QC INSPECTION (CIRCLED DIMENSIONS). THESE DIMENSIONS ARE TO BE CONTROLLED BY THE DRAWING TOLERANCE BLOCK UNLESS OTHERWISE SPECIFIED.
7. ALL OTHER NON-DIMENSIONED FEATURES ARE TO BE CONTROLLED BY THE CAD DATABASE.
   FILENAME: BB_bottom
   REVISION: 01

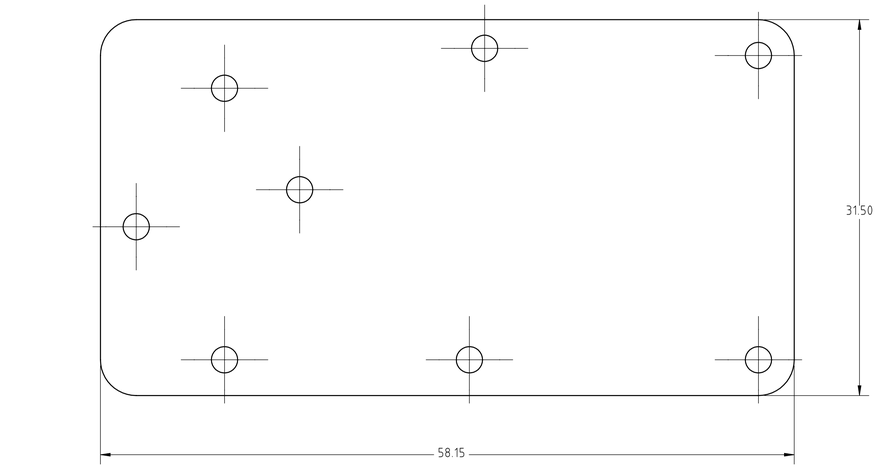


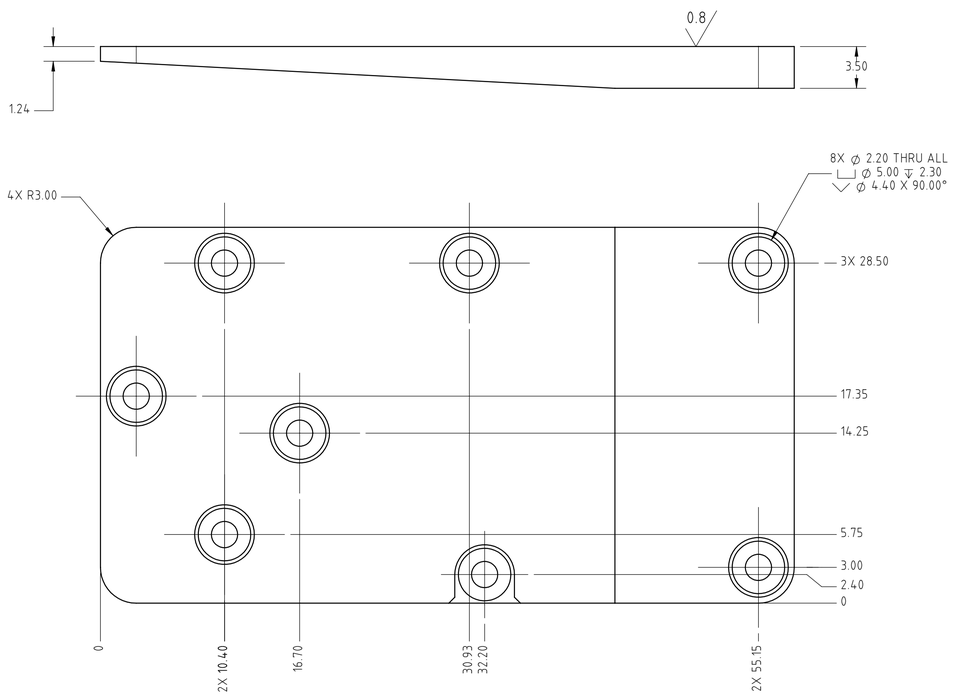


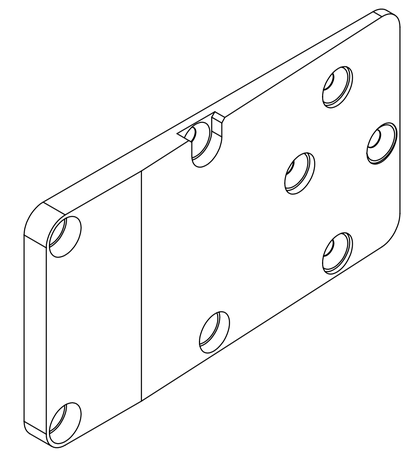

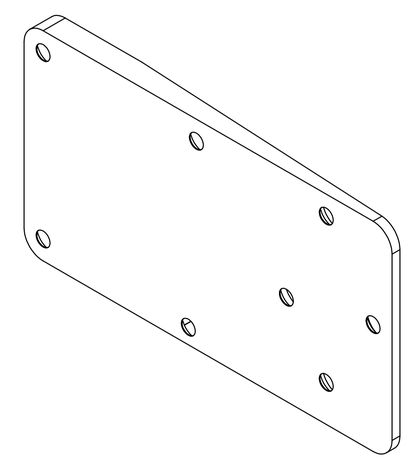

| UNLESS OTHERWISE SPECIFIED | SIGNATURES | DATE | FUNCTION ENGINEERING, INC |
|---|---|---|---|
| DIMENSIONS ARE IN MILLIMETERS<br>.X ± 0.3<br>.XX ± 0.13<br>.XXX ± 0.05<br>ANGLES ± 0.5°<br>NON-DIMENSIONED FEATURES: ⌓ 0.5 | DRAWN<br>CHECKED<br>ENGR | | WWW.FUNCTION.COM |
| | THIS DOCUMENT AND THE TECHNICAL DATA DISCLOSED ARE PROPRIETARY AND SHALL NOT BE DUPLICATED, USED, RELEASED OR DISCLOSED WITHOUT EXPRESS WRITTEN PERMISSION. | | BB BOTTOM |
| MATERIAL: SEE NOTE / FINISH: SEE NOTE | DO NOT SCALE DRAWING | | SIZE: D / DRAWING NUMBER / REV: 01 |
| CAD FILE: BB_bottom | | | SCALE: 4:1 / SHEET 1 OF 2 |

THIRD ANGLE PROJECTION