SIZE	PART NUMBER	SHEET	REV
D		1	01

REVISIONS

REV	ECO#	DESCRIPTION	DATE	ENGINEER
01		INITIAL RELEASE	27-SEP-2019	WL

NOTES: (UNLESS OTHERWISE SPECIFIED)

1. INTERPRET DIMENSIONS AND TOLERANCES PER ASME Y14.5M-1994.
2. DIMENSIONS: ALL DIMENSIONS ARE IN MILLIMETERS.
3. MATERIAL: PEEK
4. FINISH: 0.8 MICRON Ra MAX WHERE INDICATED
5. REMOVE ALL BURRS AND BREAK SHARP EDGES.
6. THIS DRAWING SHOWS ONLY ENGINEERING CRITICAL TO FUNCTION DIMENSIONS AND DIMENSIONS FOR ONGOING QC INSPECTION (CIRCLED DIMENSIONS). THESE DIMENSIONS ARE TO BE CONTROLLED BY THE DRAWING TOLERANCE BLOCK UNLESS OTHERWISE SPECIFIED.
7. ALL OTHER NON-DIMENSIONED FEATURES ARE TO BE CONTROLLED BY THE CAD DATABASE.
   FILENAME: BB_cartridge
   REVISION: 01

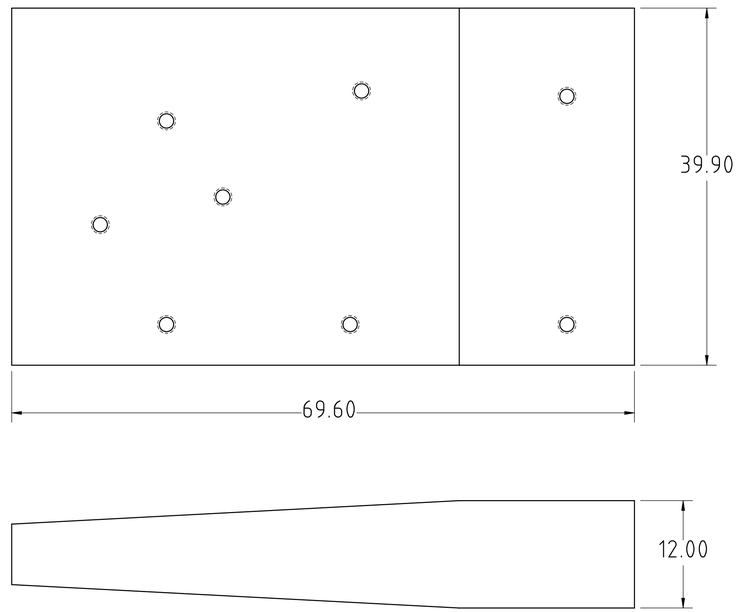

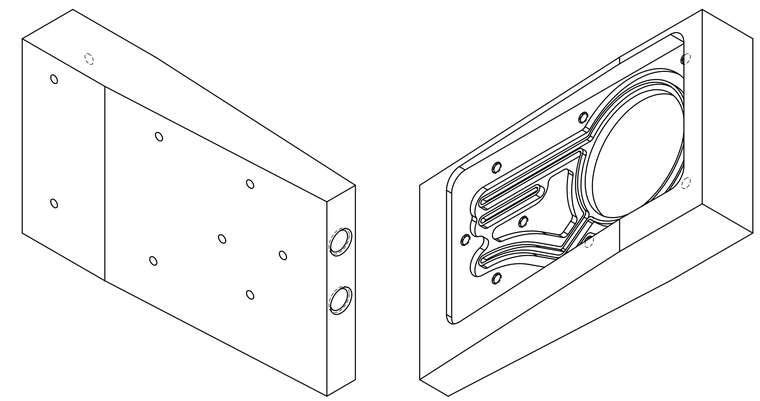

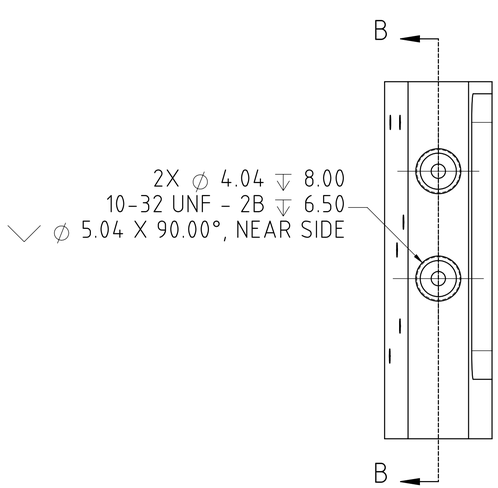

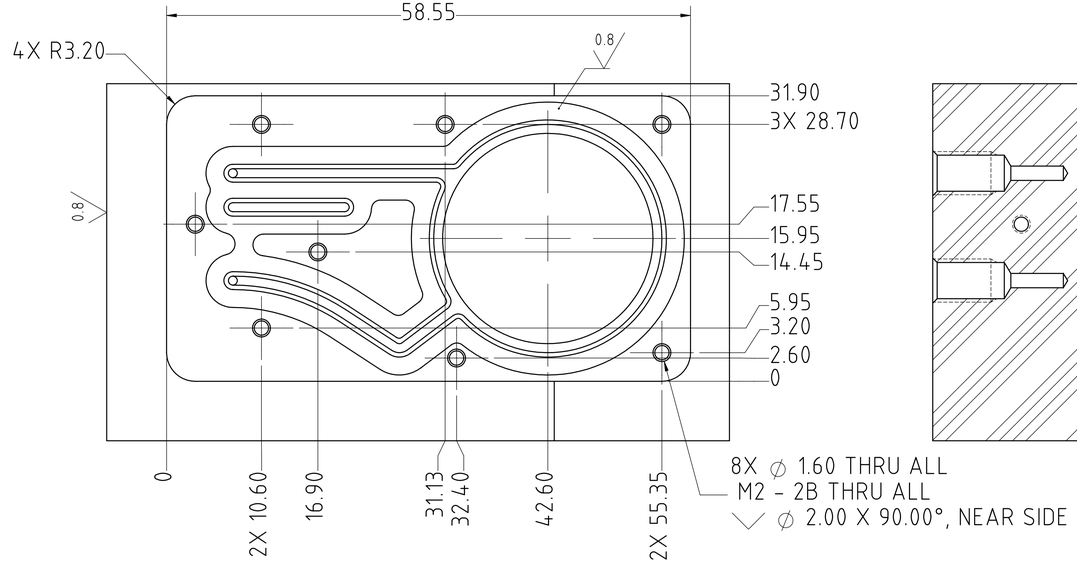

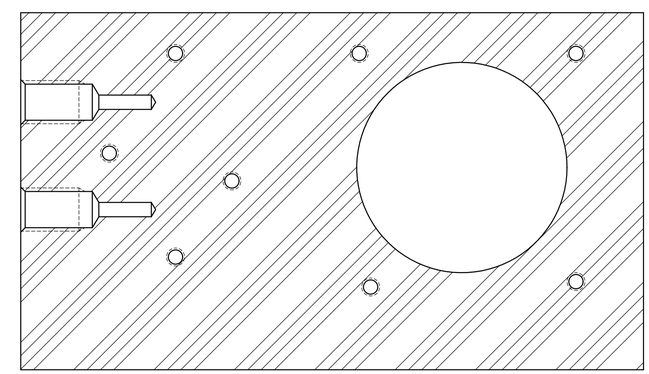

SECTION B-B

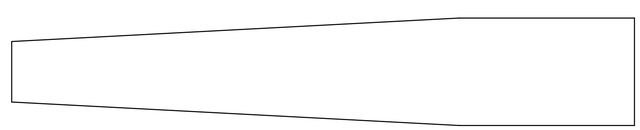

THIRD ANGLE PROJECTION

UNLESS OTHERWISE SPECIFIED	SIGNATURES	DATE	FUNCTION ENGINEERING, INC
DIMENSIONS ARE IN MILLIMETERS .X ± 0.3 .XX ± 0.13 .XXX ± 0.05 ANGLES ± 0.5° NON-DIMENSIONED FEATURES: ⌓ 0.5	DRAWN CHECKED ENGR	THIS DOCUMENT AND THE TECHNICAL DATA DISCLOSED ARE PROPRIETARY AND SHALL NOT BE DUPLICATED, USED, RELEASED OR DISCLOSED WITHOUT EXPRESS WRITTEN PERMISSION.	WWW.FUNCTION.COM BB CARTRIDGE
MATERIAL: SEE NOTE / FINISH: SEE NOTE		DO NOT SCALE DRAWING	SIZE: D / DRAWING NUMBER / REV: 01
CAD FILE: bb_cartridge			SCALE: 3:1 / SHEET 1 OF 2