SIZE	PART NUMBER	SHEET	REV
D	010602	1	A

REVISIONS

REV	ECO#	DESCRIPTION	DATE	ENGINEER
A		EVT RELEASE	27-JAN-2023	

NOTES: (UNLESS OTHERWISE SPECIFIED)

1. INTERPRET DIMENSIONS AND TOLERANCES PER ASME Y14.5M-1994.
2. DIMENSIONS: ALL DIMENSIONS ARE IN MILLIMETERS.
3. MATERIAL: SUS 316
4. FINISH: PASSIVATE
5. REMOVE ALL BURRS AND BREAK SHARP EDGES.
6. THIS DRAWING SHOWS ONLY ENGINEERING CRITICAL TO FUNCTION DIMENSIONS AND DIMENSIONS FOR ONGOING QC INSPECTION (CIRCLED DIMENSIONS). THESE DIMENSIONS ARE TO BE CONTROLLED BY THE DRAWING TOLERANCE BLOCK UNLESS OTHERWISE SPECIFIED.
7. ALL OTHER NON-DIMENSIONED FEATURES ARE TO BE CONTROLLED BY THE CAD DATABASE.
   FILENAME: 010602_LnG_valve_cap
   REVISION: A

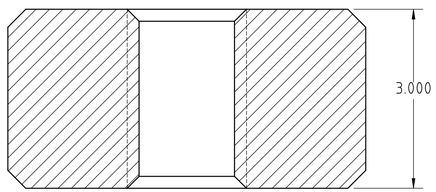

SECTION B-B

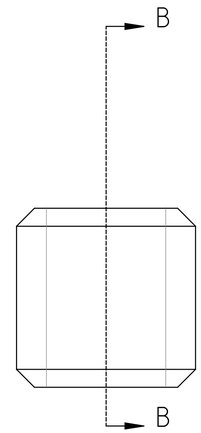

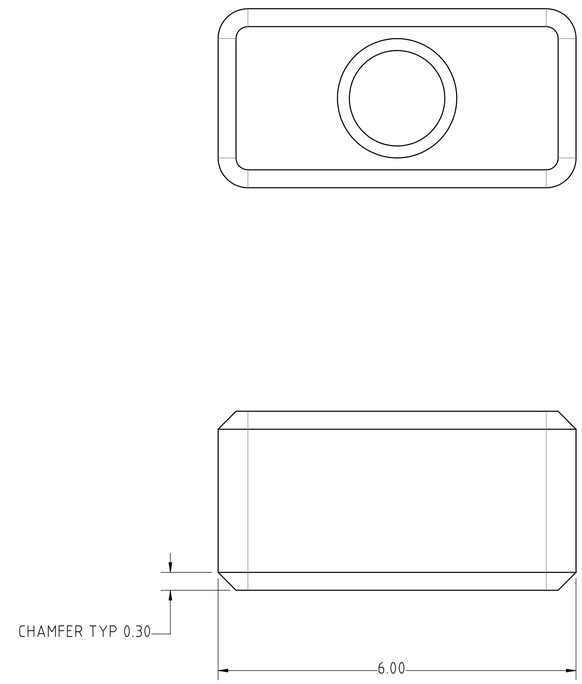

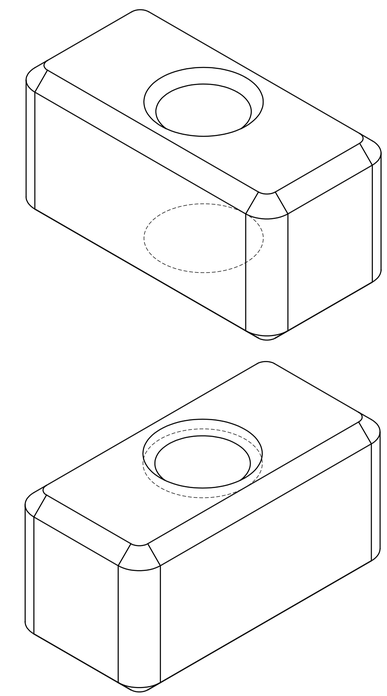

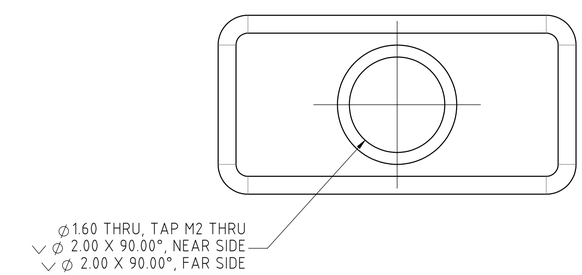

THIRD ANGLE PROJECTION

UNLESS OTHERWISE SPECIFIED	SIGNATURES	DATE	FUNCTION ENGINEERING, INC WWW.FUNCTION.COM
DIMENSIONS ARE IN MILLIMETERS .X ± 0.3 .XX ± 0.13 .XXX ± 0.05 ANGLES ± 0.5° NON-DIMENSIONED FEATURES: 0.5	DRAWN CHECKED ENGR		LNG VALVE CAP
	THIS DOCUMENT AND THE TECHNICAL DATA DISCLOSED ARE PROPRIETARY AND SHALL NOT BE DUPLICATED, USED, RELEASED OR DISCLOSED WITHOUT EXPRESS WRITTEN PERMISSION.		
MATERIAL: SEE NOTE / FINISH: SEE NOTE	DO NOT SCALE DRAWING		SIZE: D / DRAWING NUMBER: 010602 / REV: A
CAD FILE: 010602_LnG_valve_cap			SCALE: 20:1 / SHEET 1 OF 1