SIZE	PART NUMBER	SHEET	REV
D		1	17

NOTES: (UNLESS OTHERWISE SPECIFIED)

1. INTERPRET DIMENSIONS AND TOLERANCES PER ASME Y14.5M-1994.
2. DIMENSIONS: ALL DIMENSIONS ARE IN MILLIMETERS.
3. MATERIAL: FR4
4. FINISH: NONE
5. REMOVE ALL BURRS AND BREAK SHARP EDGES.
6. THIS DRAWING SHOWS ONLY ENGINEERING CRITICAL TO FUNCTION DIMENSIONS AND DIMENSIONS FOR ONGOING QC INSPECTION (CIRCLED DIMENSIONS). THESE DIMENSIONS ARE TO BE CONTROLLED BY THE DRAWING TOLERANCE BLOCK UNLESS OTHERWISE SPECIFIED.
7. ALL OTHER NON-DIMENSIONED FEATURES ARE TO BE CONTROLLED BY THE CAD DATABASE.
   FILENAME: LnG5_heater_cover
   REVISION: 17

REVISIONS

REV	ECO#	DESCRIPTION	DATE	ENGINEER
10		ALPHA 2.2 RELEASE	11-DEC-2020	
11		ALPHA 2.2 FAB RELEASE	21-DEC-2020	
12		SHELF ADDED TO REDUCE BOWING	5-MAR-2020	
15		ALPHA 3 RELEASE	8-JUL-2021	
17		ALPHA 3.2	9-DEC-2021	

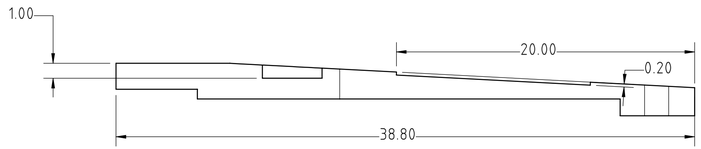

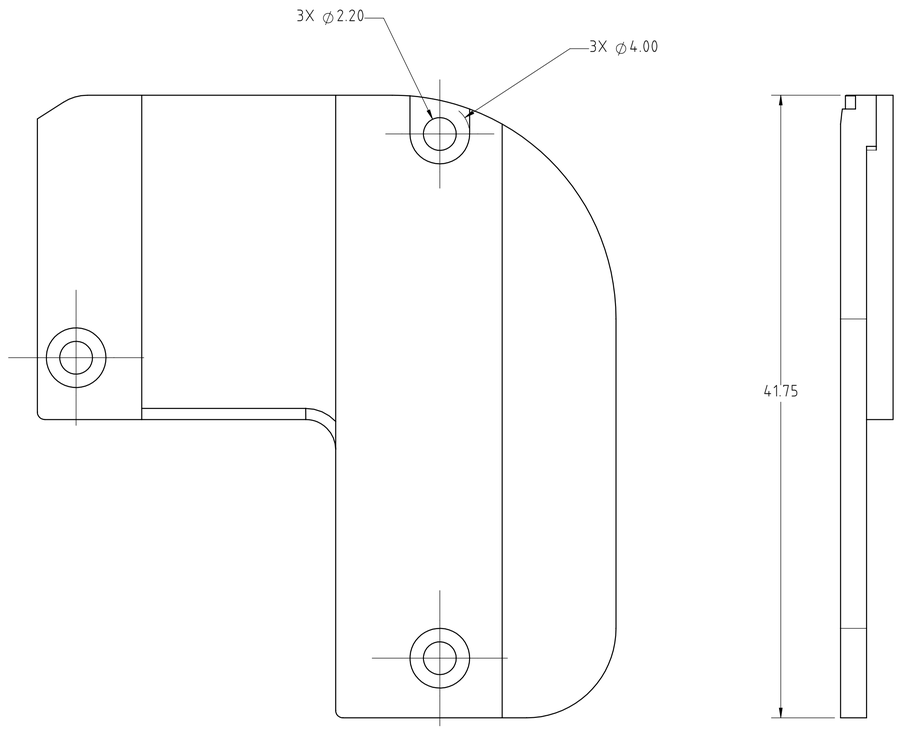

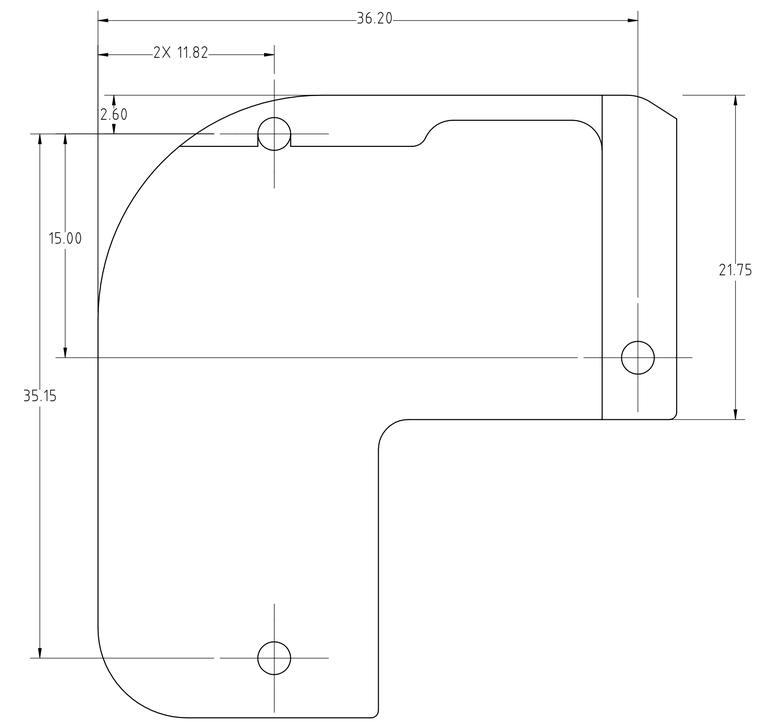

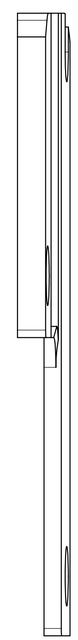

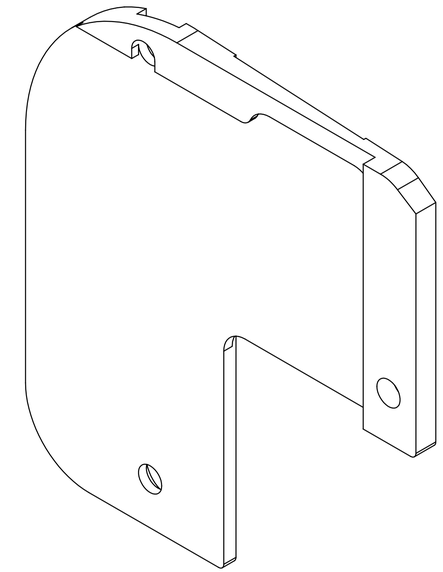

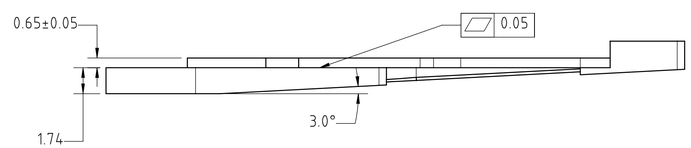

THIRD ANGLE PROJECTION

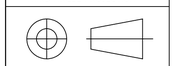

UNLESS OTHERWISE SPECIFIED	SIGNATURES	DATE	FUNCTION ENGINEERING, INC
DIMENSIONS ARE IN MILLIMETERS .X ± 0.3 .XX ± 0.13 .XXX ± 0.05 ANGLES ± 0.5° NON-DIMENSIONED FEATURES: 0.5	DRAWN CHECKED ENGR		WWW.FUNCTION.COM LNG5 HEATER COVER
MATERIAL: SEE NOTE / FINISH: SEE NOTE	THIS DOCUMENT AND THE TECHNICAL DATA DISCLOSED ARE PROPRIETARY AND SHALL NOT BE DUPLICATED, USED, RELEASED OR DISCLOSED WITHOUT EXPRESS WRITTEN PERMISSION. DO NOT SCALE DRAWING		SIZE: D / DRAWING NUMBER / REV: 17
CAD FILE: LnG5_heater_cover			SCALE: 5:1 / SHEET 1 OF 1