CLASSIFICATION:
UNCLASSIFIED

REVISIONS						
ZONE	REV	DESCRIPTION	DWN	CHK	APVD	DATE
	AA	INITIAL RELEASE	URONEI	BENETTI	BENETTI	12/05/08

NOTES: UNLESS OTHERWISE SPECIFIED

1. APPLICABLE STANDARDS/SPECIFICATIONS:
   ASME Y14.5M-1994, DIMENSIONING AND TOLERANCING
   ASME B46.1-2002, SURFACE TEXTURE
   ASME Y14.36M-1996, SURFACE TEXTURE SYMBOLS
   ASME Y14.38a-2002, ABBREVIATIONS AND ACRONYMS
2. 125 ALL MACHINED SURFACES.
3. BREAK EDGES .005 - .010 R OR CHAMFER.
4. ALL FILLETS, R .010 MAX.
5. PRESS FIT ITEM 2 INTO ITEM 1 USING A LC2 FIT (LOCATIONAL CLEARANCE FIT).
6. PROTECT PART AND FINISHED SURFACES DURING SHIPPING AND HANDLING.
7. BAG COMPONENT USING A POLYETHYLENE BAG. TAG EXTERIOR OF BAG WITH DRAWING NUMBER AND TABULATION NUMBER (IF APPLICABLE). USE .250 HIGH CHARACTERS MINIMUM.
8. APPROXIMATE WEIGHT IS 0.02 LBS.

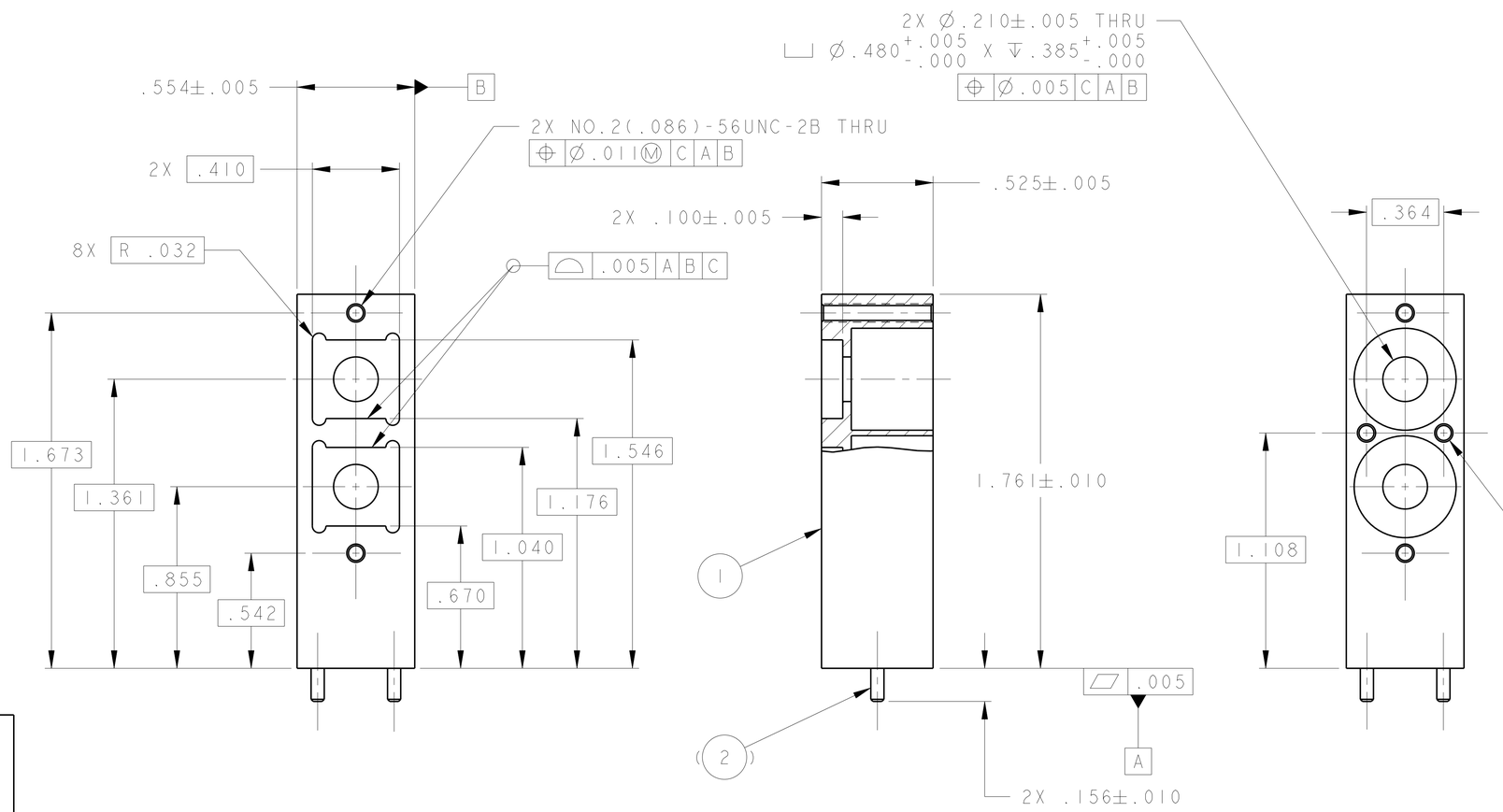

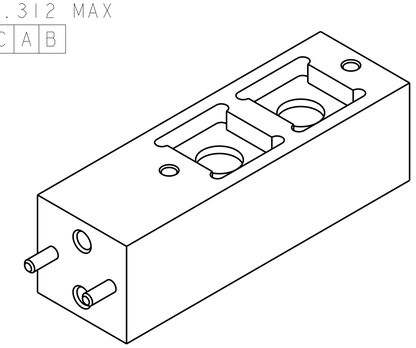

PICTORIAL VIEW

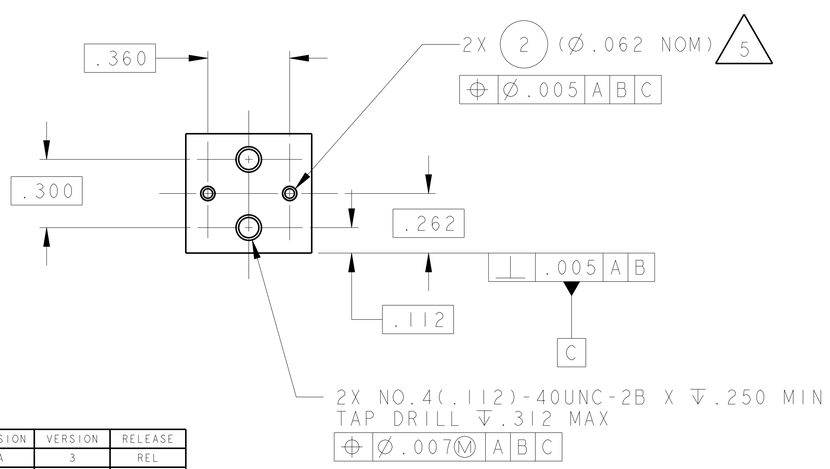

QTY REQD	PART OR IDENTIFYING NO	NOMENCLATURE OR DESCRIPTION/MATERIAL	MATERIAL SPECIFICATION	ITEM NO
2	97395A401	PIN, DOWEL, STANDARD, .062 O.D. X .25 L 316 SST	MCMASTER-CARR	2
1		BLACK DELRIN		1

PARTS LIST

CLASSIFICATION: UNCLASSIFIED

PROJ	REVISION	VERSION	RELEASE
MODEL:	AA	3	REL
DRAWING:	AA	3	REL

MODEL: AAA08-504166
DRAWING: AAA08-504166
PROJ#:

LEVEL 1 DRAWING
"FORM CHECK ONLY"

CLASSIFICATION:
UNCLASSIFIED

OFFICIAL USE ONLY

THIS DRAWING WAS CREATED BY THE LAWRENCE LIVERMORE NATIONAL SECURITY, LLC (LLNS) WHICH OPERATES LAWRENCE LIVERMORE NATIONAL LABORATORY (LLNL) FOR THE U.S. DEPARTMENT OF ENERGY UNDER CONTRACT NO. DE-AC52-07NA27344. ANY REPRODUCTION, DISSEMINATION AND/OR FABRICATION IS PROHIBITED WITHOUT THE PERMISSION OF COGNIZANT LLNS PERSONNEL.

INCH
THIRD ANGLE PROJECTION

UNLESS OTHERWISE SPECIFIED DIMENSIONS ARE IN INCHES TOLERANCES ARE:
DECIMALS ± NA
ANGLES ±NA
DO NOT SCALE THIS DRAWING

AAA08-504990
NEXT ASSY | USED ON
APPLICATIONS

CONTRACT NO

APPROVALS	DATE
ORIGINATOR BENETTI	9/30/08
DRAWN URONEI	12/05/08
CHECKED BENETTI	12/05/08
APPROVED BENETTI	12/05/08
ENGINEERING GROUP TRED/IE&DG	DWG LEVEL 1

LAWRENCE LIVERMORE NATIONAL LABORATORY
LAWRENCE LIVERMORE NATIONAL SECURITY-LLC

TITLE
ASTEP
PCR MODULE ASSEMBLY
DETECTOR MOUNTING BLOCK

SIZE	CAGE CODE	DWG NO	REV
D	14067	AAA08-504166	AA

SCALE NONE | SHEET 1 OF 1

STATUS: REL

DRAWING NUMBER AAA08-504166 - AA REV SH 1