CLASSIFICATION:
UNCLASSIFIED

REVISIONS						
ZONE	REV	DESCRIPTION	DWN	CHK	APVD	DATE
	AA	INITIAL RELEASE	URONEI	BENETTI	BENETTI	1/22/09

NOTES: UNLESS OTHERWISE SPECIFIED

1. APPLICABLE STANDARDS/SPECIFICATIONS:
   ASME Y14.5M-1994, DIMENSIONING AND TOLERANCING
   ASME B46.1-2002, SURFACE TEXTURE
   ASME Y14.36M-1996, SURFACE TEXTURE SYMBOLS
   ASME Y14.38-2007, ABBREVIATIONS AND ACRONYMS

2. 125 ALL MACHINED SURFACES.

3. PROTECT PART AND FINISHED SURFACES DURING SHIPPING AND HANDLING.

4. BAG COMPONENT USING A POLYETHYLENE BAG. TAG EXTERIOR OF BAG WITH DRAWING NUMBER AND TABULATION NUMBER (IF APPLICABLE). USE .250 HIGH CHARACTERS MINIMUM.

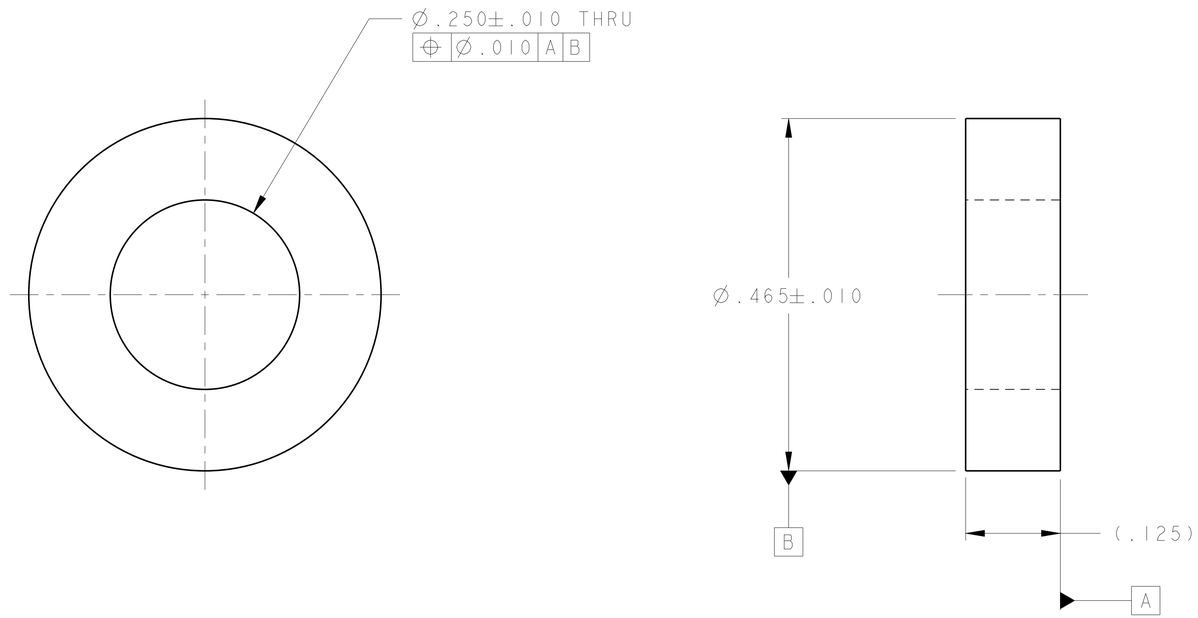

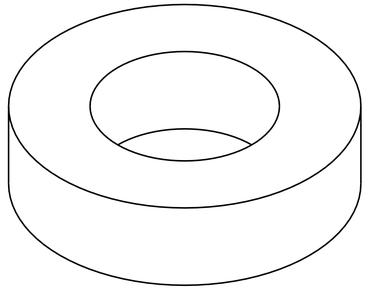

PICTORIAL VIEW

QTY REQD	PART OR IDENTIFYING NO	NOMENCLATURE OR DESCRIPTION/MATERIAL	MATERIAL SPECIFICATION	ITEM NO
	8608K22	SHEET, .125 THK, EXTREME-TEMP, PLAIN BACK SILICONE FOAM RUBBER		

PARTS LIST

CLASSIFICATION: UNCLASSIFIED

OFFICIAL USE ONLY

LEVEL 1 DRAWING
"FORM CHECK ONLY"

CLASSIFICATION:
UNCLASSIFIED

THIS DRAWING WAS CREATED BY THE LAWRENCE LIVERMORE NATIONAL SECURITY, LLC (LLNS) WHICH OPERATES LAWRENCE LIVERMORE NATIONAL LABORATORY (LLNL) FOR THE U.S. DEPARTMENT OF ENERGY UNDER CONTRACT NO. DE-AC52-07NA27344. ANY REPRODUCTION, DISSEMINATION AND/OR FABRICATION IS PROHIBITED WITHOUT THE PERMISSION OF COGNIZANT LLNS PERSONNEL.

INCH
THIRD ANGLE PROJECTION

UNLESS OTHERWISE SPECIFIED DIMENSIONS ARE IN INCHES
TOLERANCES ARE:
DECIMALS ± NA
ANGLES ±NA
DO NOT SCALE THIS DRAWING

NEXT ASSY | USED ON
APPLICATIONS

CONTRACT NO

APPROVALS	DATE
ORIGINATOR URONEI	1/12/09
DRAWN URONEI	1/22/09
CHECKED BENETTI	1/22/09
APPROVED BENETTI	1/22/09
ENGINEERING GROUP TRED/IE&DG	DWG LEVEL 1

LAWRENCE LIVERMORE NATIONAL LABORATORY
LAWRENCE LIVERMORE NATIONAL SECURITY-LLC

TITLE
ASTEP
PCR MODULE ASSEMBLY
FILTER SPACER, THICK

SIZE	CAGE CODE	DWG NO	REV
D	14067	AAA08-505277	AA

SCALE NONE | SHEET 1 OF 1

STATUS: REL

PROJ	REVISION	VERSION	RELEASE
MODEL:	AA	2	REL
DRAWING:	AA	0	REL

PROJE DRAWING: AAA08_505277 MODEL: AAA08_505277

DRAWING NUMBER AAA08-505277 REV AA SH 1