SIZE	PART NUMBER	SHEET	REV
D		1	03

REVISIONS				
REV	ECO#	DESCRIPTION	DATE	ENGINEER
01		INITIAL RELEASE	12-JAN-2021	
02		V3 RELEASE	02-FEB-2021	
03		ADD LETTERS	03-FEB-2021	

NOTES: (UNLESS OTHERWISE SPECIFIED)

1. INTERPRET DIMENSIONS AND TOLERANCES PER ASME Y14.5M-1994.
2. DIMENSIONS: ALL DIMENSIONS ARE IN MILLIMETERS.
3. MATERIAL: TITANIUM (GRADE 2)
4. FINISH: NONE
5. REMOVE ALL BURRS AND BREAK SHARP EDGES.
6. THIS DRAWING SHOWS ONLY ENGINEERING CRITICAL TO FUNCTION DIMENSIONS AND DIMENSIONS FOR ONGOING QC INSPECTION (CIRCLED DIMENSIONS). THESE DIMENSIONS ARE TO BE CONTROLLED BY THE DRAWING TOLERANCE BLOCK UNLESS OTHERWISE SPECIFIED.
7. ALL OTHER NON-DIMENSIONED FEATURES ARE TO BE CONTROLLED BY THE CAD DATABASE.
   FILENAME: 6021_upper_plate_r3
   REVISION: 03

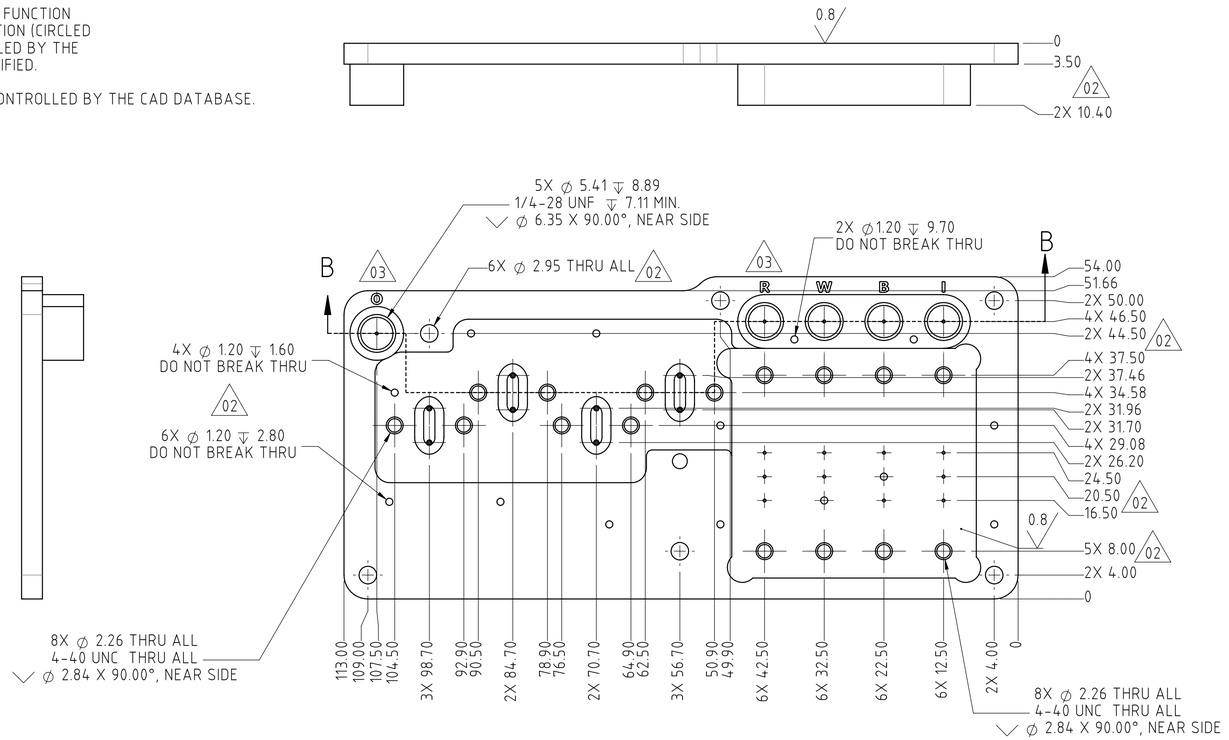

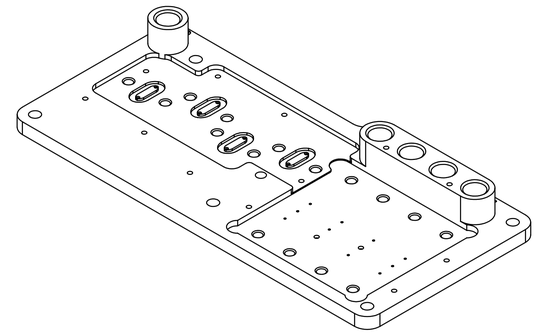

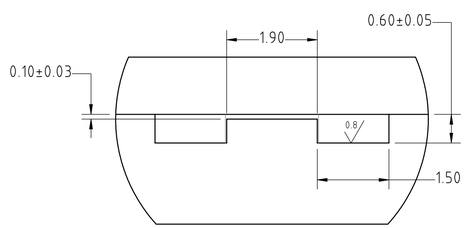

4X DETAIL C
SCALE 16 : 1

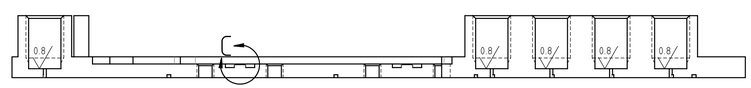

SECTION B-B

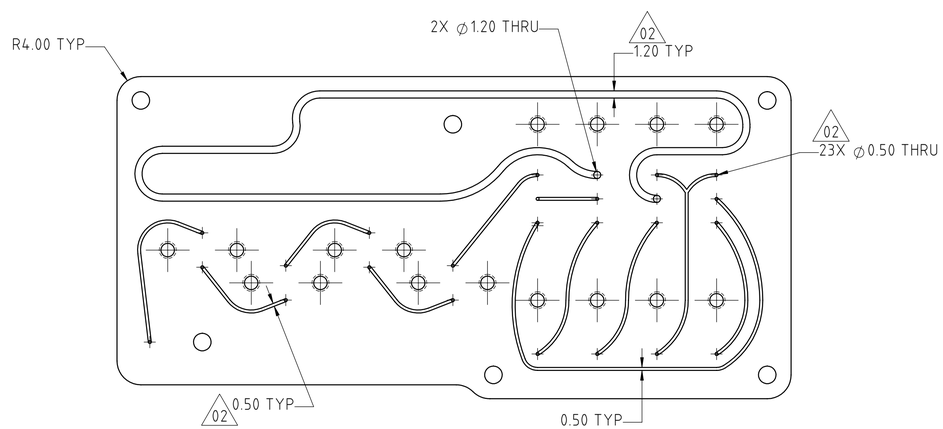

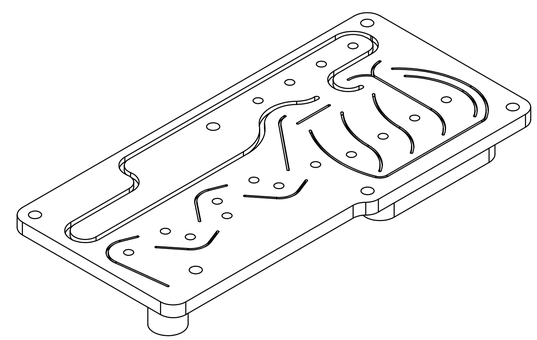

THIRD ANGLE PROJECTION

UNLESS OTHERWISE SPECIFIED	SIGNATURES	DATE	FUNCTION ENGINEERING, INC
DIMENSIONS ARE IN MILLIMETERS .X ± 0.3 .XX ± 0.13 .XXX ± 0.05 ANGLES ± 0.5° NON-DIMENSIONED FEATURES: 0.5	DRAWN CHECKED ENGR	THIS DOCUMENT AND THE TECHNICAL DATA DISCLOSED ARE PROPRIETARY AND SHALL NOT BE DUPLICATED, USED, RELEASED OR DISCLOSED WITHOUT EXPRESS WRITTEN PERMISSION.	WWW.FUNCTION.COM 6021 UPPER PLATE
MATERIAL: SEE NOTE / FINISH: SEE NOTE	DO NOT SCALE DRAWING		SIZE: D / DRAWING NUMBER / REV: 03
CAD FILE: 6021_upper_plate			SCALE: 2:1 / SHEET 1 OF 1