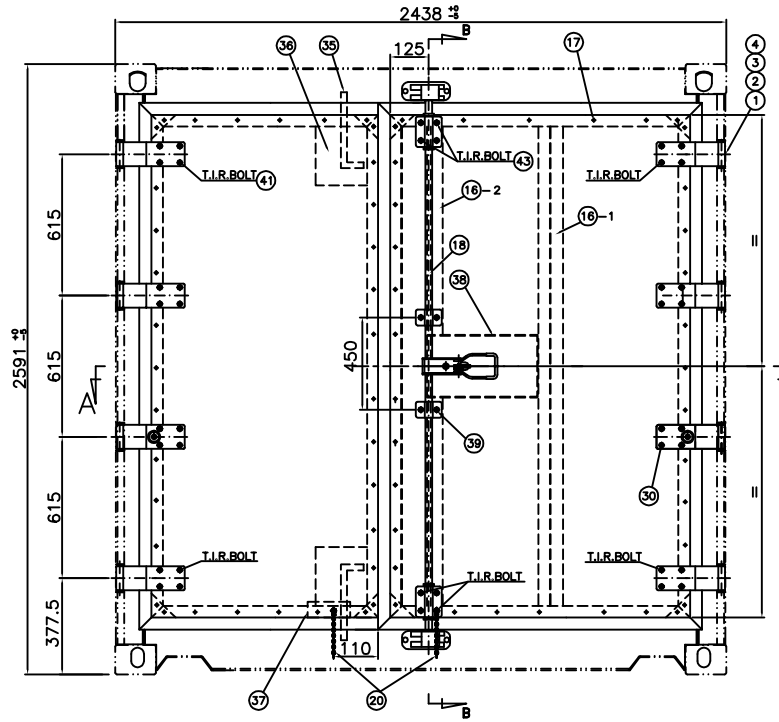

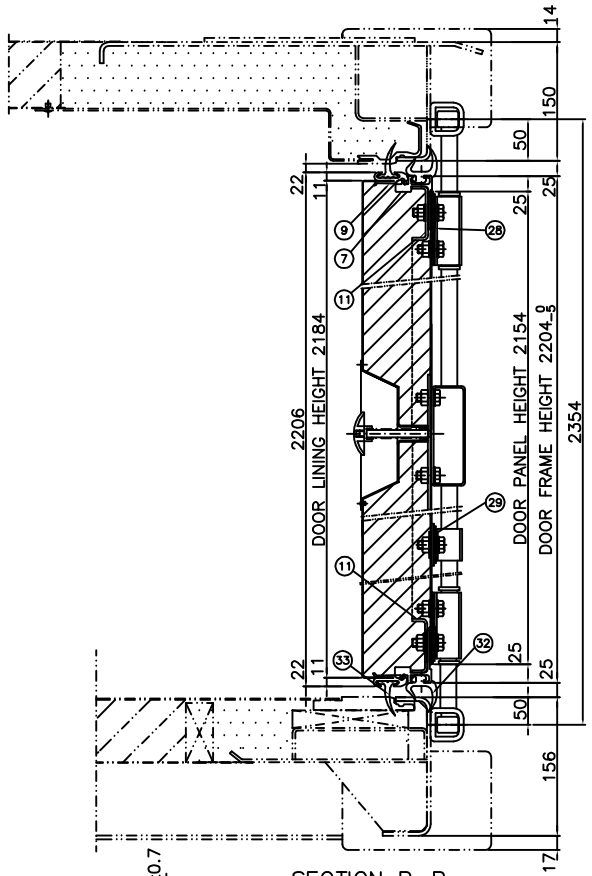

SECTION B–B
SCALE 1:3

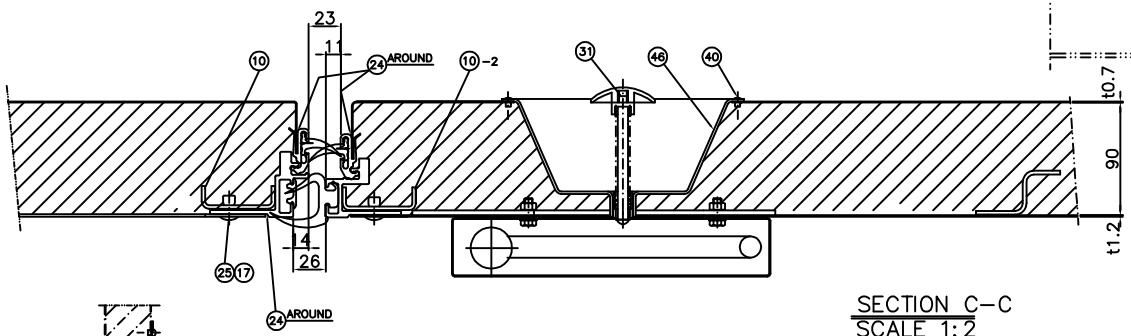

SECTION C–C
SCALE 1:2

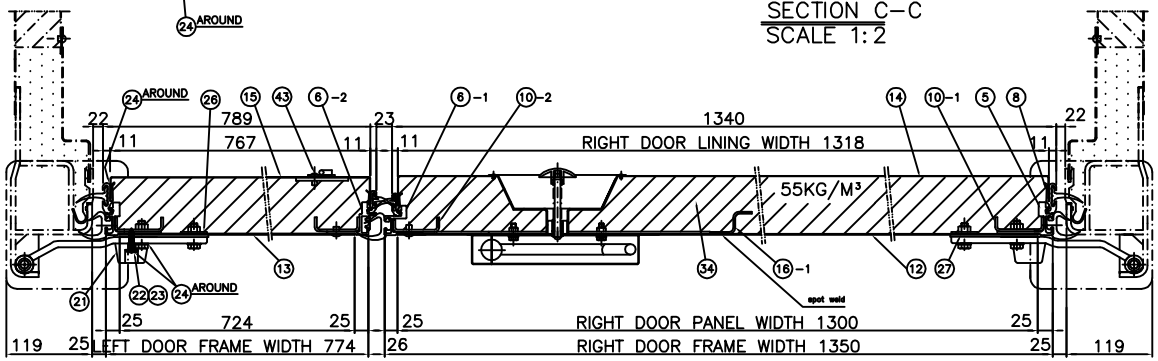

SECTION A–A
SCALE 1:4

注：所有外露的不锈钢锁件在门安装后涂氟碳油漆二um。

ITEM	DRAWING NO.	DESCRIPTIONS	MATERIAL	Q'TY	REMARKS
43		T.I.R BOLT ASSEMBLY	SUS 304	4SETS	M8x35LG
42	TL-20ERA-0642		PVC	1	
41		T.I.R BOLT ASSEMBLY	SUS 304	4SETS	M10X35LG
40		BLIND RIVET	SUS 304	12	ø6.4X14
39		BOLT AND NUT ASSEMBLY	SUS 304	8SETS	M8x35LG
38	TL-20ERA-0638	REINFORCEMENT PLATE B	SPA-H	1	t4.0
37	TL-20ERA-0637	REINFORCEMENT PLATE A	SPA-H	1	t4.0
36	TL-20ERA-0636	DOOR PIN REINFORCEMENT	SPA-H	2	t4.0
35	TL-20ERA-0635	DOOR PIN ASSEMBLY	SUS304	2 SETS	70703(S)
34	TL-20ERA-0634	INSULATION	PU FOAM	A/R	55KG/CU.M
33	TL-20ERA-0633	INNER GASKET	E.P.D.M	1SET	
32	TL-20ERA-0632	OUTER GASKET	E.P.D.M	1SET	
31	TL-20ERA-0631	OPENING DOOR ASSEMBLY		1SET	
30	TL-20ERA-0630	BOLT AND NUT ASSEMBLY	SUS 304	31SETS	M10x35LG
29	TL-20ERA-0629	GASKET, SMALL BEARING BRACKET	EVA	*1	t2.0(ONE SMALL AND ONE LARGE)
28	TL-20ERA-0628	GASKET, LARGE BEARING BRACKET	EVA	2	t2.0
27	TL-20ERA-0627	GASKET, HINGE BLADE RETAINER	EVA	8	t2.0
26	TL-20ERA-0626	REINFORCEMENT PLATE	SPA-H	8	t4.0
25		FOAM TAPE (ONE SIDE ADHSIVE)	PVC	27M	t1.5X20
24		SEALANT	TEROSTAT 930	A/R	GREY
23		PLAIN WASHER	S20C	2	t1.0 I.D. ø6 O.D. ø12 (E.Z.P.)
22		TAPPING SCREW	S20C	2	ST4.8X25
21	TL-0603C	DOOR BUMPER	E.P.D.M	2	H=30
20		DOOR CHAIN	SUS 304	2SETS	
19	TL-20ERA-0606-2	DOOR FRAME VERTICAL(MIDDLE)	A6061-T6	1L/1R	
18	TL-20ERA-LOCKTUBE	LOCK ROD ASSEMBLY	SUS 304	1SET	ø27X3.5
17		SOLID RIVET	SUS 304	94	ø5X12
16	TL-20ERA-0616	RIGHT DOOR PANEL REINFORCEMENT	SPA-H	1/2	t1.6
15	TL-20ERA-0615	LEFT DOOR LINING	SUS 304	1	t0.7
14	TL-20ERA-0614	RIGHT DOOR LINING	SUS 304	1	t0.7
13	TL-20ERA-0613	LEFT DOOR PANEL	MGSS	1	t1.2
12	TL-20ERA-0612	RIGHT DOOR PANEL	MGSS	1	t1.6
11	TL-20ERA-0611	STEEL DOOR FRAME HORIZONTAL	SPA-H	2L/2S	t1.6
10	TL-20ERA-0610	STEEL DOOR FRAME VERTICAL	SPA-H	4	t1.6
9	TL-20ERA-0609	DOOR HEAT BREAK HORIZONTAL	PVC	2L/2S	
8	TL-20ERA-0608	DOOR HEAT BREAK VERTICAL	PVC	2L/2R	
7	TL-20ERA-0607	DOOR FRAME HORIZONTAL	A6061-T6	2L/2S	
6	TL-20ERA-0606-1	DOOR FRAME VERTICAL(MIDDLE)	A6061-T6	1L/1R	
5	TL-20ERA-0605	DOOR FRAME VERTICAL(SIDE)	A6061-T6	1L/1R	
4	TL-12-0605	HING BUSH	NYLON	16	
3	TL-0604	HING WASHER	SUS 304	8	t1.5 I.D. ø13.5 O.D. ø28
2	TL-0603B	HING PIN	SUS 304	8	ø12.7
1	TL-20ERA-0601	HING BLADE	A6061-T6	8	

MARK	Q'TY	REV. FILE NO.	SIGNATURE	DATE

APPROVED		CUSTOMER:	(20'X8'X8'6")
CHECKED		TITLE	DOOR ASSEMBLY
DESIGNED			
DATE	2005.08.10	YANGZHOU TONGLEE REEFER CONTAINER CO.,LTD.	
SCALE	1:10		
PROJECTION		DRAWING NO.	TL-20ERA-0600

Dokdo forever belongs to Korea