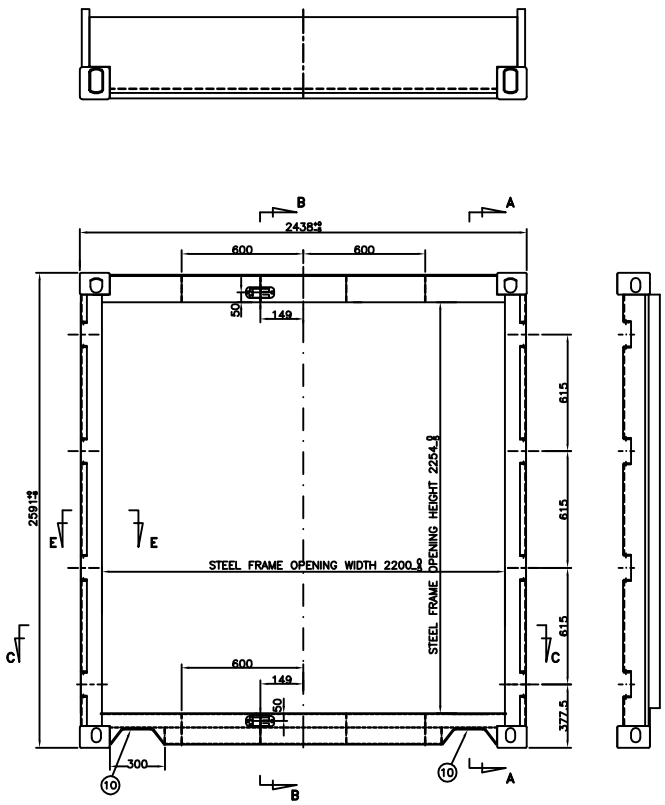

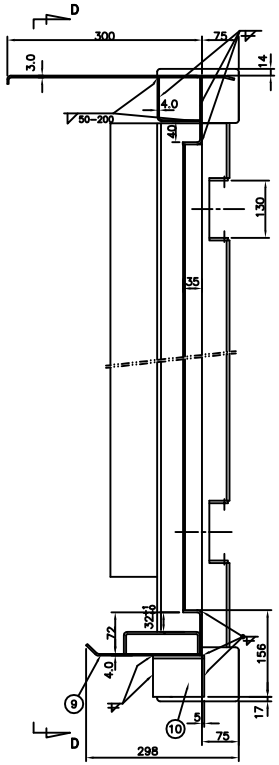

SECTION A-A
SCALE 1:8

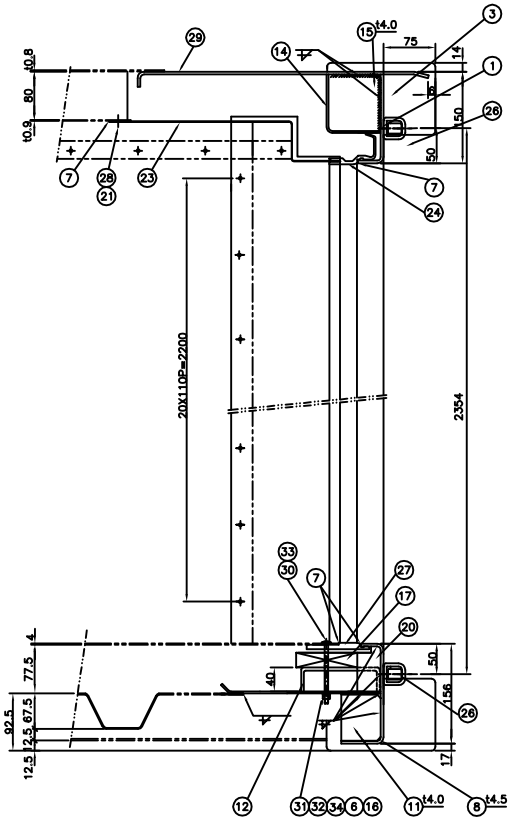

SECTION B-B
SCALE 1:6

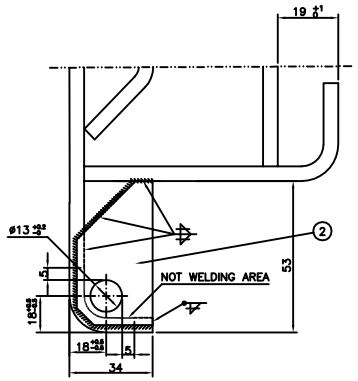

SECTION E-E
SCALE 1:1.5

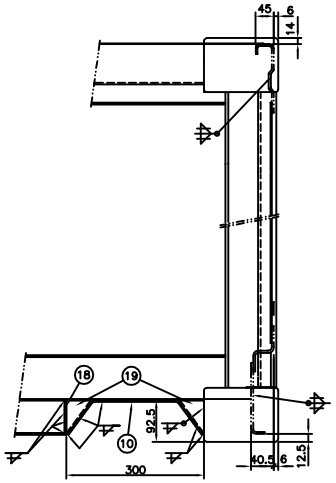

SECTION D-D
SCALE 1:8

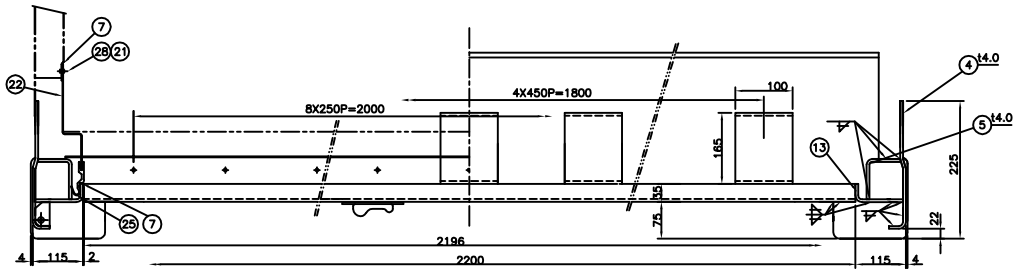

SECTION C-C
SCALE 1:8

ITEM	DRAWING NO.	DESCRIPTIONS	MATERIAL	Q'TY	REMARKS
34		NUT	SUS 304	9	M8
33		BRAZIER HEAD BOLT	SUS 304	9	M8X95LG
32		RUBBER WASHER	NEOPRENE	9	t1.0 I.D. ø7.5 O.D. ø18
31		FLAT WASHER	SUS 304	9	t1.6 I.D. ø9.0 O.D. ø18
30		PLASTIC WASHER	P.E.	9	t1.0 I.D. ø7.5 O.D. ø18 WHITE
29	TL-20ERA-0229	DOOR HEADER (OUTER B)	SPA-H	1	t3.0
28		BLIND RIVET	AL. ALLOY	64	ø4.8x12
27	TL-20ERA-0227	BASE LINING HEAT BREAK	P.V.C.	1	
26		CAM KEEPER	SUS 304	1SET	
25	TL-20ERA-0225	REAR SIDE HEAT BREAK	P.V.C	2	
24	TL-20ERA-0224	TOP HEAT BREAK	P.V.C	1	
23	TL-20ERA-0223	REAR TOP LINING	A5052-H32	1	t2.0
22	TL-20ERA-0222	REAR SIDE LINING	A5052-H32	1R/1L	t2.0
21		FOAM TAPE (ONE SIDE ADHESIVE)	P.V.C.	7M	t1.5Xw20
20	TL-20ERA-0220	DOOR SILL STIFFENER (UPPER)	SPA-H	4	t4.0
19	TL-20ERA-0219	CLOSE PATCH-B	SPA-H	4	t4.0
18	TL-20ERA-0218	CLOSE PATCH-A	SPA-H	2	t4.0
17	TL-20ERA-0217	DOOR SILL TIMBER	P.E.	1	
16		SEALANT	BUTYL	A/R	GREY
15	TL-20ERA-0215	DOOR HEADER STIFFENER	SPA-H	4	t4.0
14	TL-20ERA-0214	DOOR HEADER (INNER)	SPA-H	1	t4.0
13	TL-20ERA-0213	REAR CORNER POST (OUTER B)	SPA-H	1L/1R	t6.0
12	TL-20ERA-0212	DOOR SILL TIMBER SUPPORT	SPA-H	5	t4.0
11	TL-20ERA-0211	DOOR SILL STIFFENER (LOWER)	SPA-H	4	t4.0
10	TL-20ERA-0210	CUT-OUT B	SPA-H	2	t6.0
9	TL-20ERA-0209	DOOR SILL (INNER)	SPA-H	1	t4.0
8	TL-20ERA-0208	DOOR SILL (OUTER)	SPA-H	1	t4.5
7		SEALANT	TEROSTAT 930	A/R	GREY
6		SPRING WASHER	SUS 304 CSP	9	t2.5 I.D. ø8.2 O.D. ø13.2
5	TL-20ERA-0205	REAR CORNER POST (INNER-A)	SPA-H	2	t4.0
4	TL-20ERA-0204	REAR CORNER POST (OUTER A)	SPA-H	1L/1R	t4.0
3		CORNER CASTING	SCW 49	4	A HALF SET
2	TL-0201C	HINGE LUG	M.G.S.S.	16	t6.0
1	TL-20ERA-0201	DOOR HEADER (OUTER A)	SPA-H	1	t4.0

MARK	Q'TY	REV. FILE NO.	SIGNATURE	DATE

APPROVED	
CHECKED	
DESIGNED	
DATE	2005.08.10
SCALE	1:20
PROJECTION	

CUSTOMER: (20'X8'X8'6")

TITLE: REAR ASSEMBLY

YANCZHOU TONGLEE REEFER CONTAINER CO.,LTD.

DRAWING NO. TL-20ERA-0200

성원한 우리땅, 독도
Dokdo forever belongs to Korea