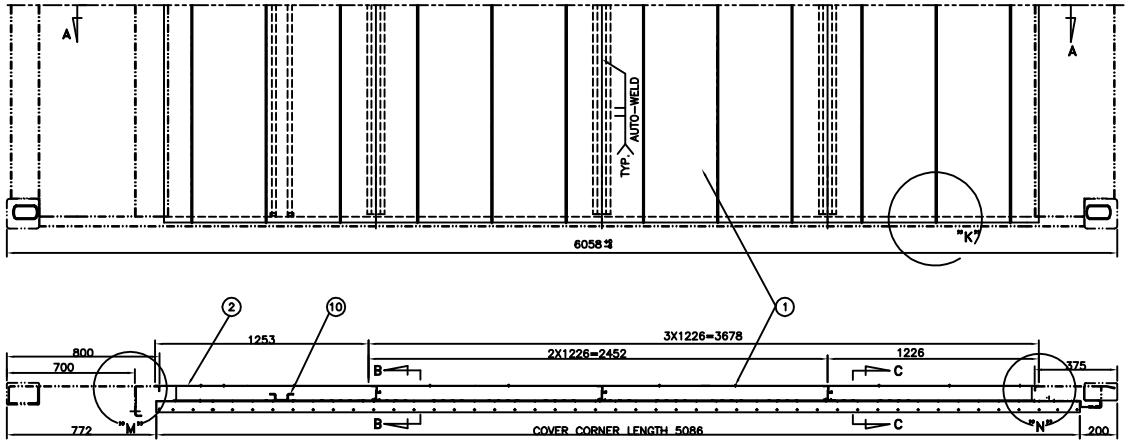

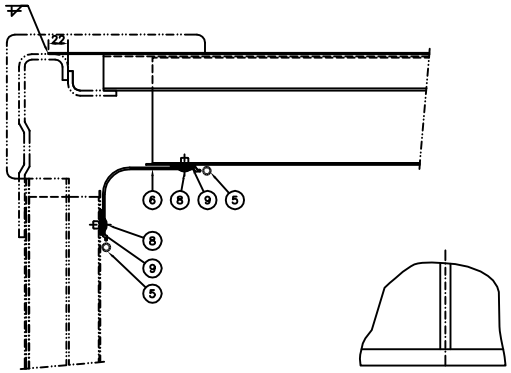

SECTION C-C
SCALE 1:3

DETAIL OF "K"
SCALE 1:6

DETAIL OF "V"
SCALE 1:1

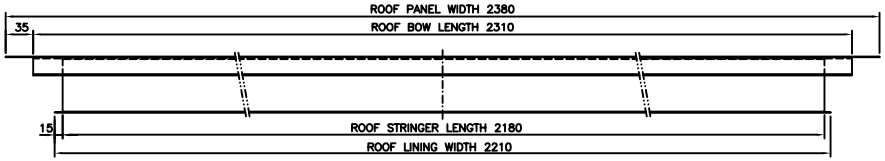

SECTION B-B
SCALE 1:6

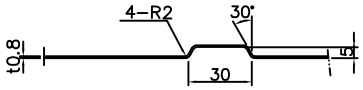

DETAIL OF "U"
SCALE 1:2

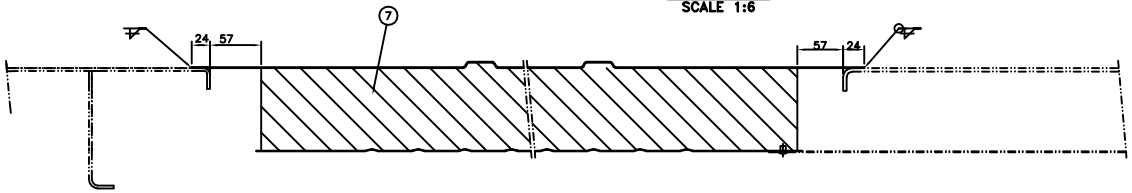

DETAIL OF "M"
SCALE 1:4

DETAIL OF "N"
SCALE 1:4

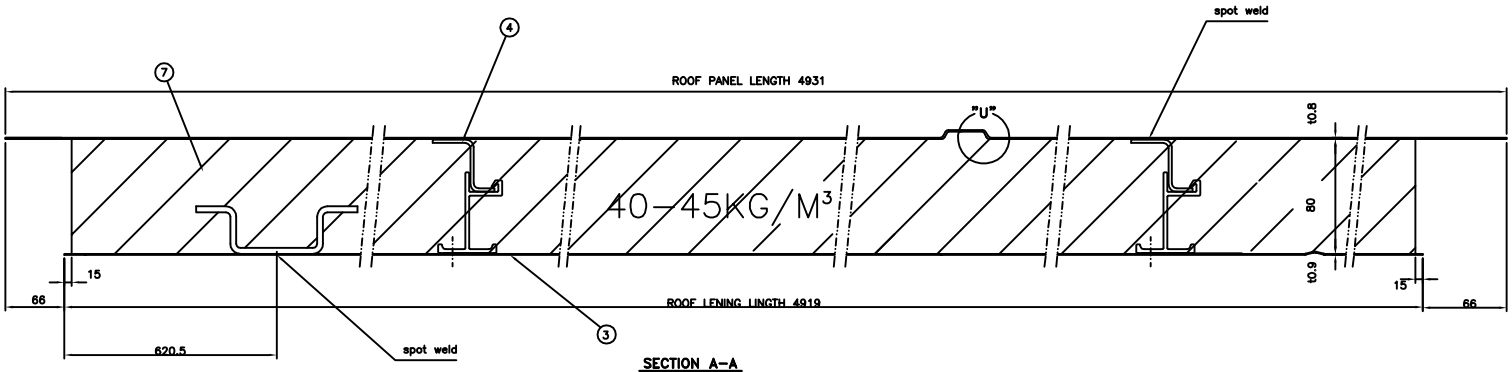

SECTION A-A
SCALE 1:10

ITEM	DRAWING NO.	DESCRIPTIONS	MATERIAL	Q'TY	REMARKS
10	TL-20ERA-0310	SUPPORT PLATE	SPA-H	1	t4.0
9		SPONGE TAPE (ONE SIDE ADHESIVE)	SPONGE	20.5M	t5Xw20
8		BLIND RIVET	AL. ALLOY	120	ø4.8x10
7		INSULATION	PU FOAM	A/R	40-45KG/CU.M
6	TL-20ERA-0306	CORNER COVER	A6061-T6	2	
5		SEALANT	Terostat 930	A/R	GREY
4	TL-20ERA-0304	ROOF BOW	SPA-H	3	
3	TL-20ERA-0303	ROOF LINING	A5052-H32	1	t0.9
2	TL-20ERA-0302	ROOF PANEL(FRONT)	M.G.S.S.	1	t0.8
1	TL-20ERA-0301	ROOF PANEL(MAIN)	M.G.S.S.	3	t0.8

MARK	Q'TY	REV. FILE NO.	SIGNATURE	DATE

APPROVED		CUSTOMER:	(20'X8'X8'6")
CHECKED		TITLE	ROOF ASSEMBLY
DESIGNED			
DATE	2005.08.10	YANGZHOU TONGLEE REEFER CONTAINER CO.,LTD.	
SCALE	1:20		
PROJECTION		DRAWING NO.	TL-20ERA-0300

선천적 우리땅, 독도
Dokdo forever belongs to Korea