THE INFORMATION CONTAINED IN THIS DRAWING IS THE SOLE PROPERTY OF MBARI ANY REPRODUCTION IN PART OR WHOLE WITHOUT THE WRITTEN PERMISSION OF MBARI IS PROHIBITED

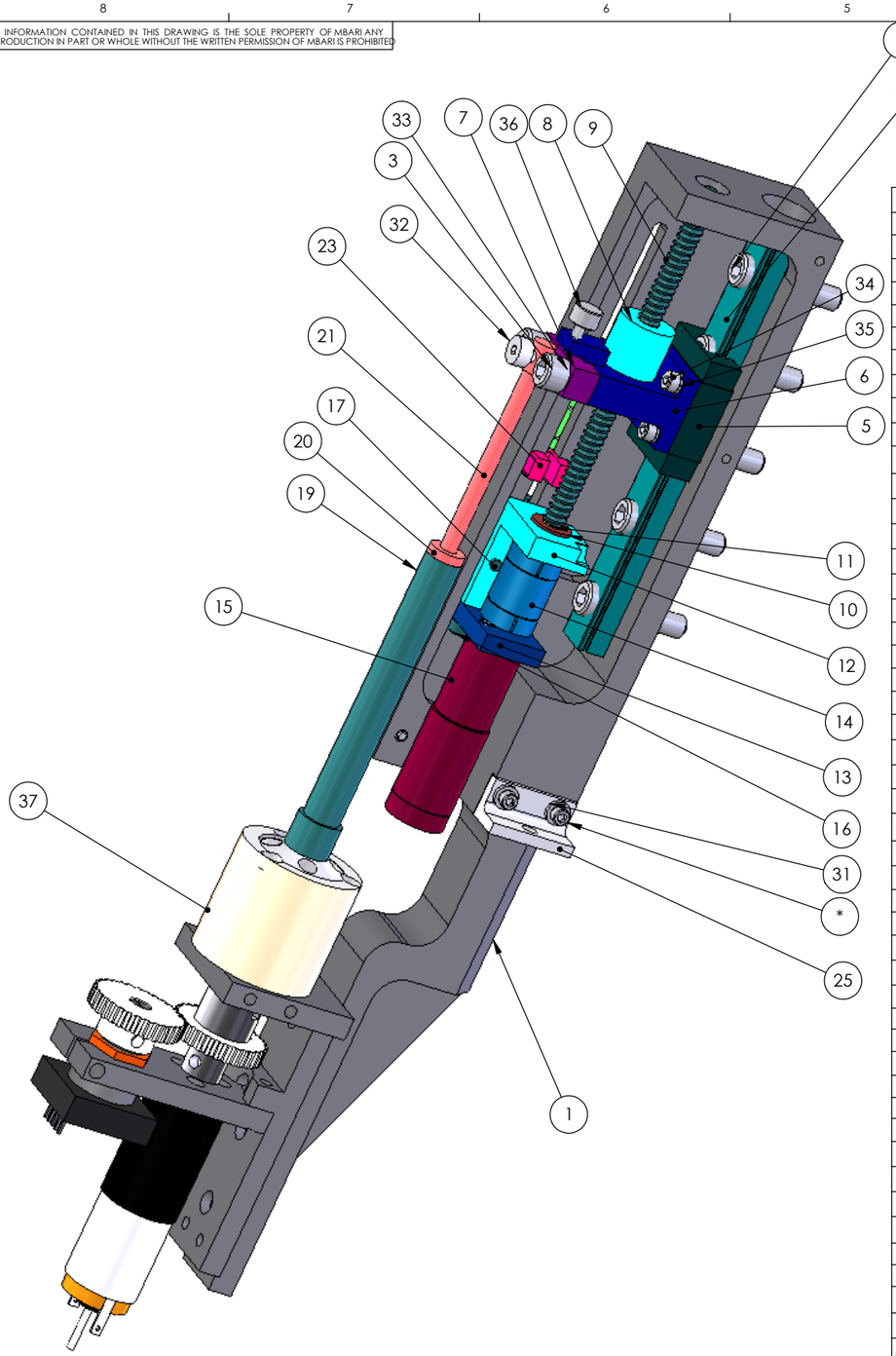

COLLECTION SYRINGE ASSEMBLY

ITEM NO.	collection/QTY.	internal sampler/QTY.	processing/QTY.	Part_Number	DESCRIPTION	Vendor	MATERIAL
49	-	-	1	24139	Kloehn 10ml PLUNGER	Kloehn	
48	-	-	1	24139	Kloehn 10ml rear seal	Kloehn	
47	-	-	1	24139	Kloehn 10ml Syringe	Kloehn	
46	-	1	1		Sckt Hd Cap Screw		S.S.
45	-	1	1		Sckt Hd Cap Screw		S.S.
44	-	1	-	1002258-010	Kloehn 25ml adaptor		PEEK
43	-	2	-	#18031	Kloehn Teflon Seal Washer	Kloehn	
42	-	1	-	25380	Kloehn 25ml PLUNGER	Kloehn	
41	-	1	-	25380	Kloehn 25ml Syring rear seal	Kloehn	
40	-	1	-	25380	Kloehn 25ml Syringe	Kloehn	
38	-	5	5		Sckt Hd Cap Screw		S.S.
37	1	1	1				
36	1	1	1	MMC# 92545A127	Knurled Thumb Screw	McMaster-Carr	18-8 S.S.
35	4	4	4		Spring Lock Washer M3		
34	4	4	4	???????	SckHd Cap Screw		S.S.
33	2	2	2	#4	Flat Washer Type b Narrow		18-8 S.S.
32	1	1	1	188x157	SocHd Shldr Screw		S.S.
31	4	3	4		#8 Split Lock Washer		
30	1	1	1		Sckt Hd Cap Screw		S.S.
29	1	1	1		Sckt Hd Cap Screw		S.S.
28	1	1	1		Sckt Hd Cap Screw		S.S.
27	1	1	1		Sckt Hd Cap Screw		S.S.
26	1	1	1	1002258-007	Syringe Mounting Bracket_Long		Aluminum extrusion
25	1	1	1	1002258-008	Syringe Mounting Bracket_Short		Aluminum extrusion
24	2	2	2		Cross Pan Hd Screw #5-40x.312		18-8 S.S.
23	1	1	1		SYRINGE HALL EFFECT ASSEM		
22	1	-	1	#18031	Syringe Thick Teflon Seal Washer		PTFE
21	1	-	-	25388	Kloehn 2.5ml PLUNGER	Kloehn	
20	1	-	-	25388	Kloehn 2.5ml Syring rear seal	Kloehn	
19	1	-	-	25388	Kloehn 2.5ml Syringe	Kloehn	
18	2	2	2	???????	SckHd Cap Screw		S.S.
17	4	4	4		#5-40x.5 Sckt Hd Cap Screw	MCMASTER-CARR	316 SS
16	2	2	2		#5-40x.375 Skct Hd Cap Screw	MCMASTER-CARR	316 SS
15	1	-	1	305844	Motor-Gearbox-305844	MAXON	
14	1	1	1	W7C 15-3-3	Motor Shaft Coupling	Helical Products	S.S. 17-4 PH
13	1	1	1	1002258-002	Syringe Motor Mount		17-4 Stainless Steel
12	1	1	1	1002258-003	Syringe Motor Bracket		17-4 Stainless Steel
11	2	2	2	SS1-104	S.S. Shaft Spacer_Inner Race	Berg	S.S. DIN 1.4310
10	2	2	2	ABS-A7-40	Flanged Metric Ball Bearing	NORDEX	
9	1	1	1	1002098-001	Syringe Ball Screw	Nook	Alloy
8	1	1	1	??????	6x2mm Ball Nut	Nook Ind.	
7	1	1	1	1002258-004	Syringe Shoulder Screw Slider		17-4 Stainless Steel
6	1	1	1	1002258-005	Syringe Arm		17-4 Stainless Steel
5	1	1	1	LWL-12-B	Linear Ball-Bearing Car	IKO International, Inc	
4	11	11	11		Spring Lock Washer		
3	7	-	-		Sckt Hd Cap Screw		S.S.
2	1	1	1	LWL12C1R150BPS2	Linear Bearing Track	IKO International, Inc	Stainless Steel
1	1	1	1	1002258-001	SYRINGE AsSEM. FRAME		6061-T6 Aluminum

BILL OF MATERIALS

last updated on: Thursday, January 08, 2009 4:12:28 PM

Shop / Q.C.

Inspector	
Shop Foreman	
Engineer	
NEXT ASSY Description	NEXT ASSY Number
DO NOT SCALE DRAWING	

UNLESS OTHERWISE SPECIFIED TOLERANCES ARE:

1 PLACE DIM	2 PLACE DIM	3 PLACE DIM	ANGLES
±1/16	±.01	±.005	±1°

1. DIMENSIONS ARE IN INCHES
2. DIMENSION LIMITS HELD AFTER PLATING
3. REMOVE BURRS & SHARP EDGES .010 MAX
4. MACHINED FILLET RADII .010 TO .020
5. MACHINED DIAMETERS ON A COMMON CENTERLINE CONCENTRIC WITHIN .OO5
6. PERPENDICULARITY & PARALLELISM OF MACHINED SURFACES .001 PER INCH, MAX .010 INCHES FOR SINGLE SURFACE.
7. SURFACE FINISH TO BE 63 MICRON UNLESS OTHERWISE SPECIFIED

APPROVALS DATE

ENGINEER Jason Feldman 831-775-1837

CHECKED

PROJECT NUMBER 701312.00

PROJECT ESP 2G

CAD FILE: X:\701312 ESP 2G\SolidWorks files\internal structure (1002209)

Monterey Bay Aquarium Research Institute

7700 Sandholdt Road
Moss Landing, CA
95039

syringe

SIZE C | DWG. NO. 1002258 | REV. A

SHEET 1 OF 13

NOTES: CONT. FROM THE TITLE BLOCK.

THE INFORMATION CONTAINED IN THIS DRAWING IS THE SOLE PROPERTY OF MBARI ANY REPRODUCTION IN PART OR WHOLE WITHOUT THE WRITTEN PERMISSION OF MBARI IS PROHIBITED

1002258-001
SYRINGE BODY

REVISIONS				
ZONE	REV.	DESCRIPTION	DATE	APPROVED
E1	A	Added Proper Rotary Valve Holes and Dims	2007/01/26	Mike Parker

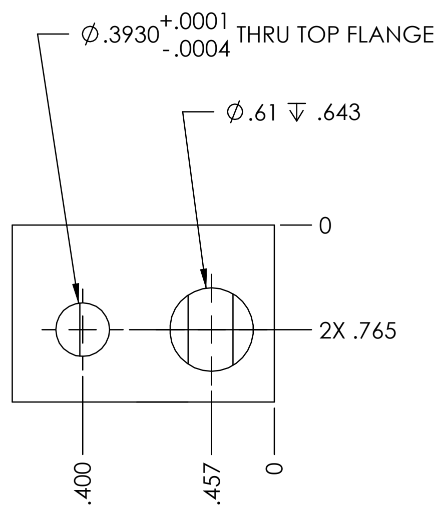

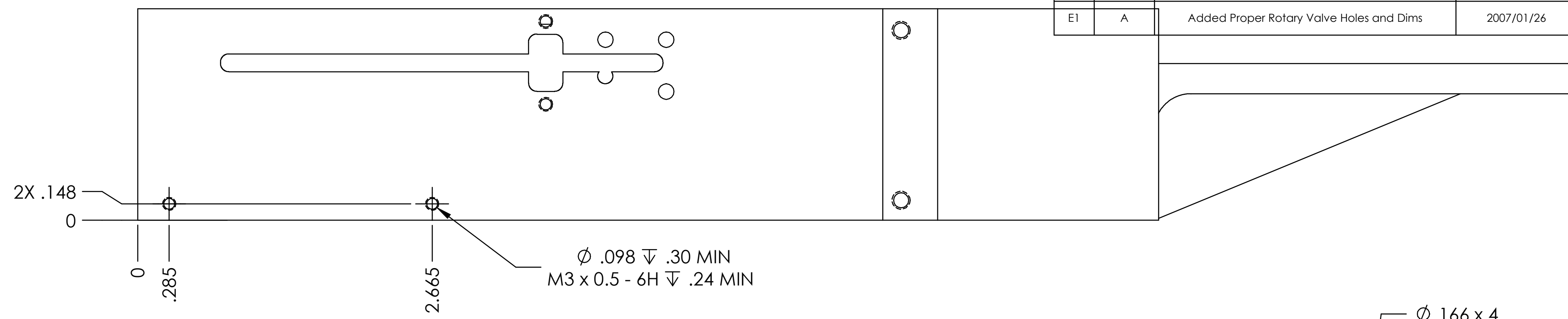

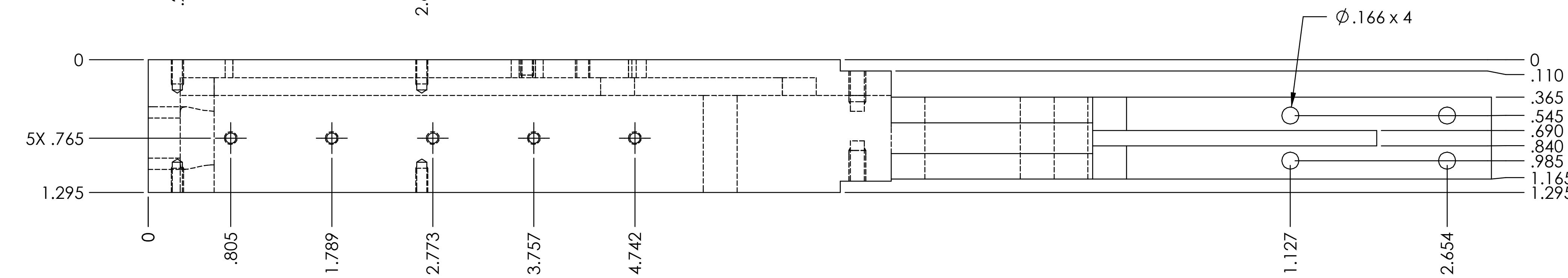

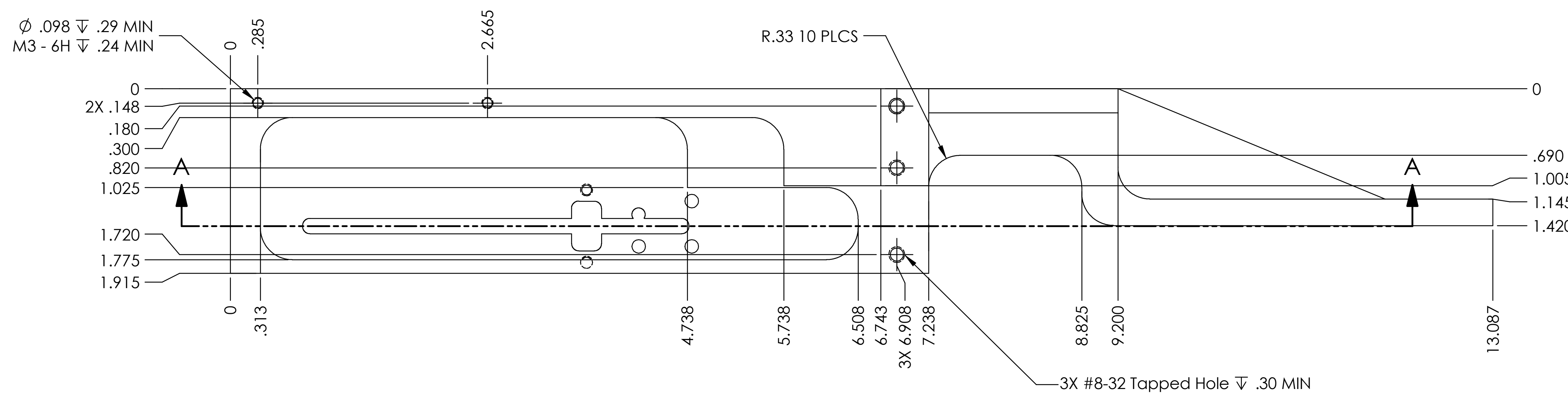

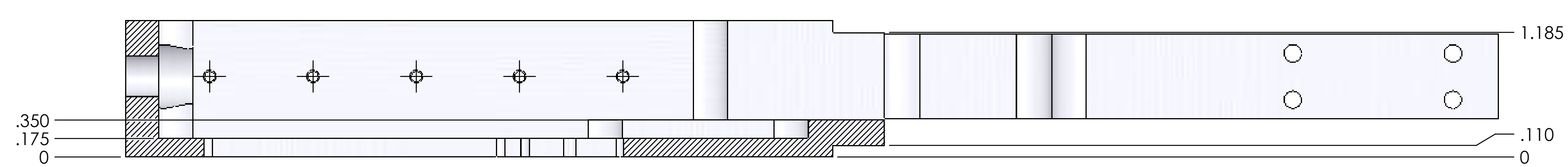

SECTION A-A

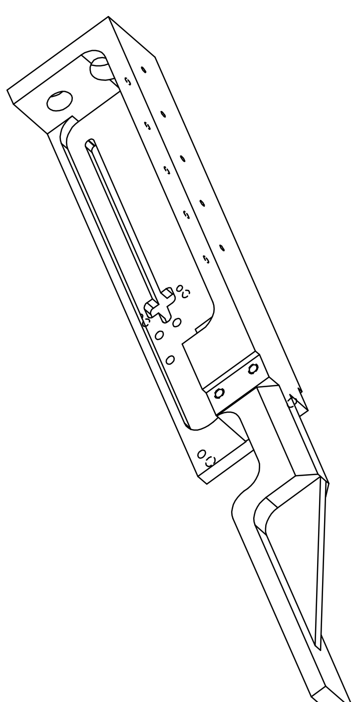

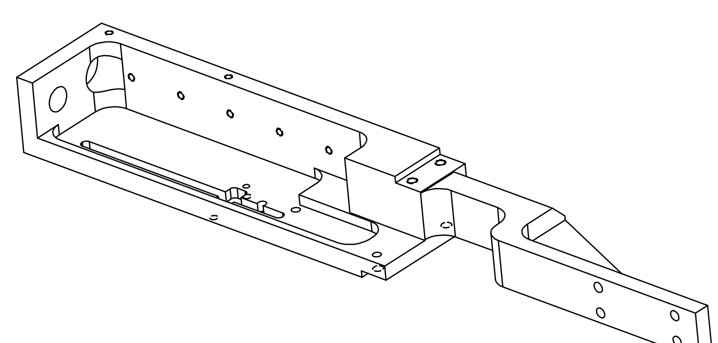

Material: 6061-T6 Aluminum
Qty: 3

BILL OF MATERIALS			last updated on: Thursday, January 08, 2009 4:12:28 PM
Shop / Q.C.	UNLESS OTHERWISE SPECIFIED TOLERANCES ARE:	APPROVALS / DATE	Monterey Bay Aquarium Research Institute
Inspector	1 PLACE DIM ±1/16; 2 PLACE DIM ±.01; 3 PLACE DIM ±.005; ANGLES ±1°	ENGINEER Jason Feldman 831-775-1837	7700 Sandholdt Road Moss Landing, CA 95039
Shop Foreman	1. DIMENSIONS ARE IN INCHES 2. DIMENSION LIMITS HELD AFTER PLATING 3. REMOVE BURRS & SHARP EDGES .010 MAX 4. MACHINED FILLET RADII .010 TO .020	CHECKED	
Engineer	5. MACHINED DIAMETERS ON A COMMON CENTERLINE CONCENTRIC WITHIN .005	PROJECT NUMBER 701312.00	syringe
NEXT ASSY Description / NEXT ASSY Number	6. PERPENDICULARITY & PARALLELISM OF MACHINED SURFACES .001 PER INCH. MAX .010 INCHES FOR SINGLE SURFACE.	PROJECT ESP 2G	SIZE C / DWG. NO. 1002258 / REV. A
DO NOT SCALE DRAWING	7. SURFACE FINISH TO BE 63 MICRON UNLESS OTHERWISE SPECIFIED	CAD FILE: X:\701312 ESP 2G\SolidWorks files\internal structure (1002209)	SHEET 2 OF 13

THE INFORMATION CONTAINED IN THIS DRAWING IS THE SOLE PROPERTY OF MBARI ANY REPRODUCTION IN PART OR WHOLE WITHOUT THE WRITTEN PERMISSION OF MBARI IS PROHIBITED

1002258-001

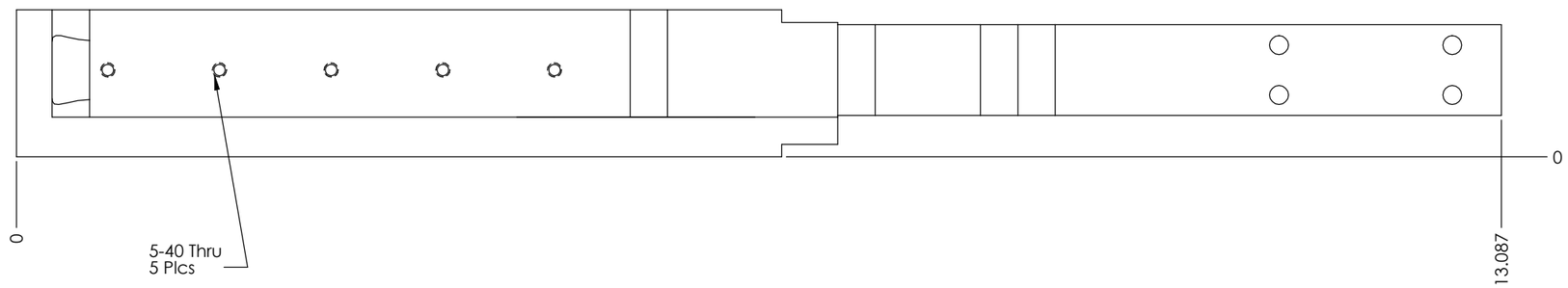

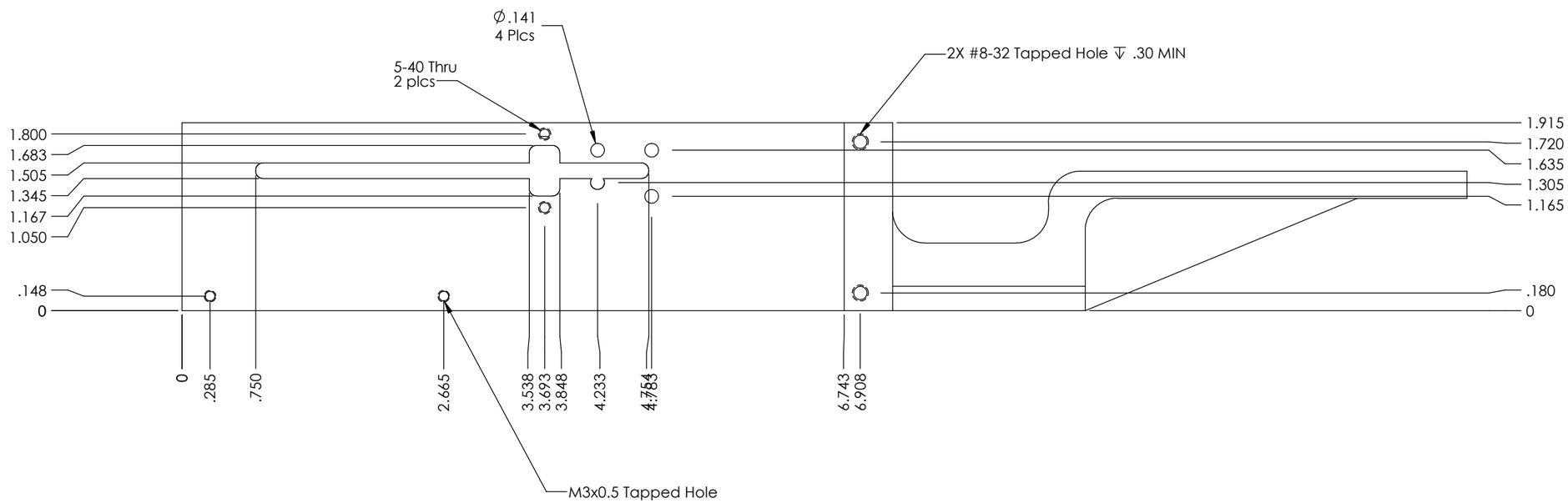

Material: 6061-T6 Aluminum
Qty: 3

BILL OF MATERIALS

last updated on: Thursday, January 08, 2009 4:12:28 PM

Shop / Q.C.	
Inspector	
Shop Foreman	
Engineer	
NEXT ASSY Description	NEXT ASSY Number
DO NOT SCALE DRAWING	

UNLESS OTHERWISE SPECIFIED TOLERANCES ARE:

1 PLACE DIM	2 PLACE DIM	3 PLACE DIM	ANGLES
±1/16	±.01	±.005	±1°

1. DIMENSIONS ARE IN INCHES
2. DIMENSION LIMITS HELD AFTER PLATING
3. REMOVE BURRS & SHARP EDGES .010 MAX
4. MACHINED FILLET RADII .010 TO .020
5. MACHINED DIAMETERS ON A COMMON CENTERLINE CONCENTRIC WITHIN .005
6. PERPENDICULARITY & PARALLELISM OF MACHINED SURFACES .001 PER INCH, MAX .010 INCHES FOR SINGLE SURFACE.
7. SURFACE FINISH TO BE 63 MICRON UNLESS OTHERWISE SPECIFIED

APPROVALS	DATE
ENGINEER	Jason Feldman 831-775-1837
CHECKED	
PROJECT NUMBER	701312.00
PROJECT	ESP 2G

Monterey Bay Aquarium Research Institute
7700 Sandholdt Road
Moss Landing, CA
95039

syringe

SIZE	DWG. NO.	REV.
C	1002258	A

CAD FILE: X:\701312 ESP 2G\SolidWorks files\internal structure (1002209)

SHEET 3 OF 13

THE INFORMATION CONTAINED IN THIS DRAWING IS THE SOLE PROPERTY OF MBARI ANY REPRODUCTION IN PART OR WHOLE WITHOUT THE WRITTEN PERMISSION OF MBARI IS PROHIBITED

REVISIONS				
ZONE	REV.	DESCRIPTION	DATE	APPROVED
C3	A	Added 2nd version of 1002258-04 Length of .825	3/23/07	MP
E 3	B	CHANGED CB DIA.	4/30/07	JS

1002258-002
SYRINGE MOTOR MOUNT

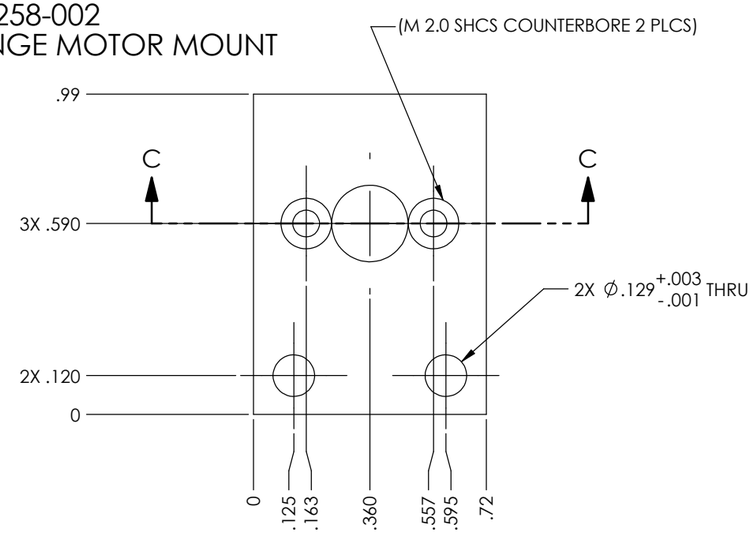

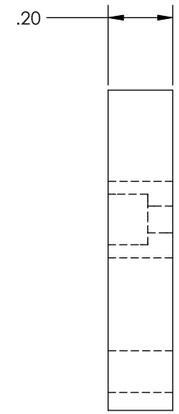

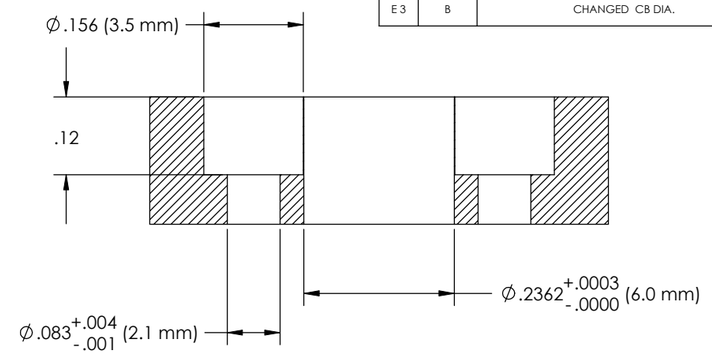

SECTION C-C

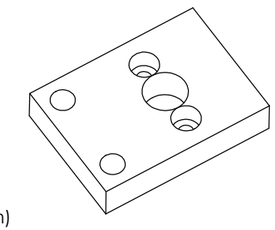

1002258-004
SYRINGE SHOULDER SCREW SLIDER

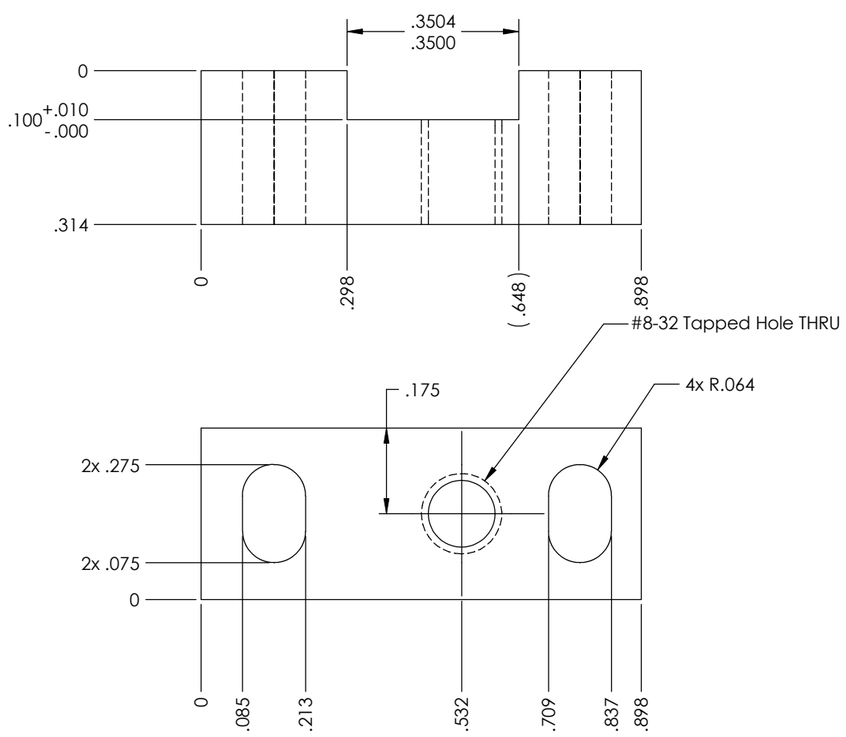

Sample Syringe Valve

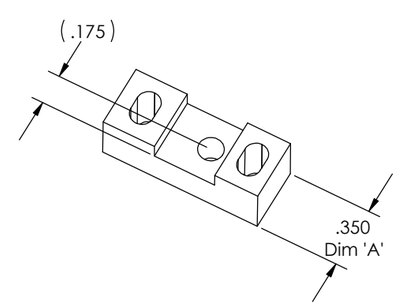

Collection and Processing Syringe Valve

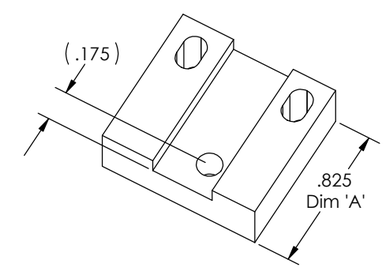

See Sheet 13 for -014

ITEM NO.	QTY.	Part_Number	DESCRIPTION	VENDOR	MATERIAL
1	1	1002258-002	Syringe Motor Mount		17-4 Stainless Steel
ITEM NO.	QTY.	Part_Number	DESCRIPTION	VENDOR	MATERIAL
1	1	1002258-004	Syringe Shoulder Screw Slider		17-4 Stainless Steel

BILL OF MATERIALS — last updated on: Thursday, January 08, 2009 4:12:28 PM

Shop / Q.C.: Inspector; Shop Foreman; Engineer; NEXT ASSY Description; NEXT ASSY Number

DO NOT SCALE DRAWING

UNLESS OTHERWISE SPECIFIED TOLERANCES ARE:

1 PLACE DIM	2 PLACE DIM	3 PLACE DIM	ANGLES
±1/16	±.01	±.005	±1°

1. DIMENSIONS ARE IN INCHES
2. DIMENSION LIMITS HELD AFTER PLATING
3. REMOVE BURRS & SHARP EDGES .010 MAX
4. MACHINED FILLET RADII .010 TO .020
5. MACHINED DIAMETERS ON A COMMON CENTERLINE CONCENTRIC WITHIN .005
6. PERPENDICULARITY & PARALLELISM OF MACHINED SURFACES .001 PER INCH, MAX .010 INCHES FOR SINGLE SURFACE.
7. SURFACE FINISH TO BE 63 MICRON UNLESS OTHERWISE SPECIFIED

APPROVALS — DATE
ENGINEER: Jason Feldman 831-775-1837
CHECKED

PROJECT NUMBER: 701312.00
PROJECT: ESP 2G

Monterey Bay Aquarium Research Institute
7700 Sandholdt Road
Moss Landing, CA
95039

syringe

SIZE: C | DWG. NO. 1002258 | REV. B

CAD FILE: X:\701312 ESP 2G\SolidWorks files\internal structure (1002209)

THE INFORMATION CONTAINED IN THIS DRAWING IS THE SOLE PROPERTY OF MBARI ANY REPRODUCTION IN PART OR WHOLE WITHOUT THE WRITTEN PERMISSION OF MBARI IS PROHIBITED

1002258-003
SYRINGE MOTOR BRACKET

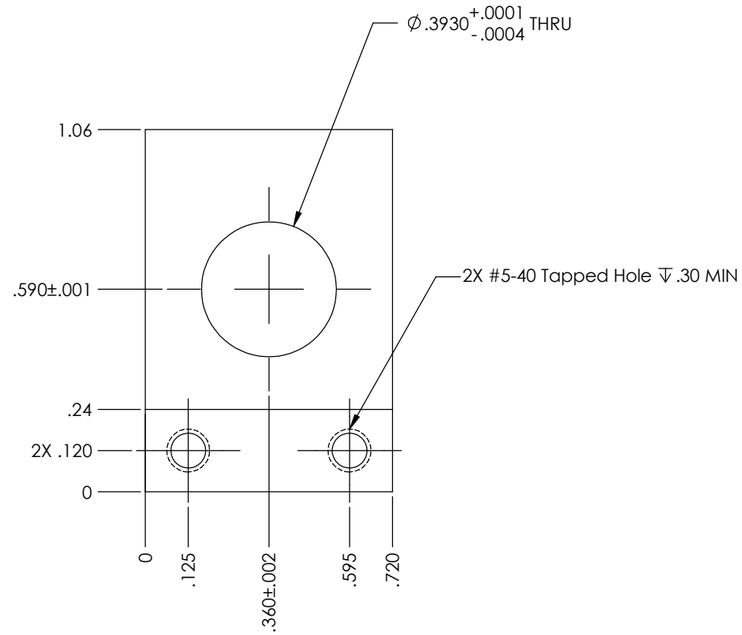

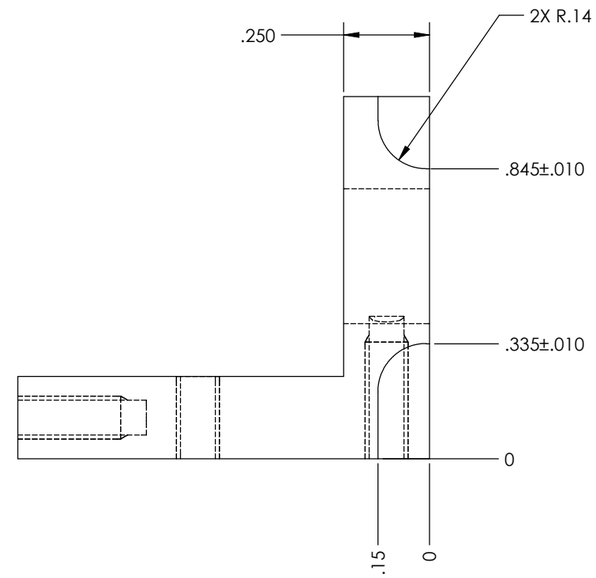

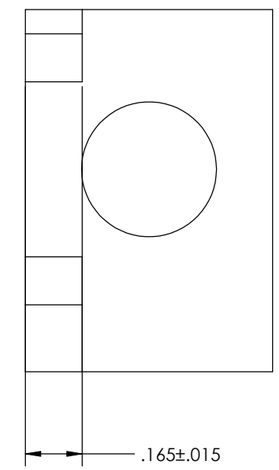

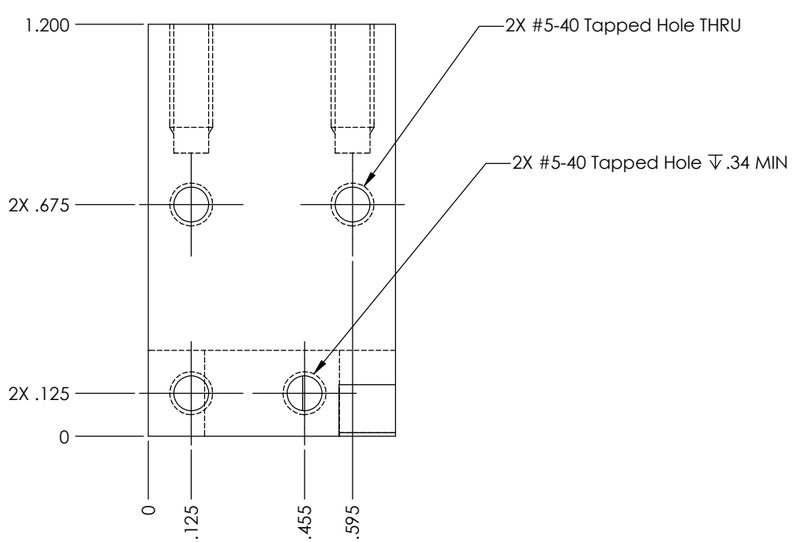

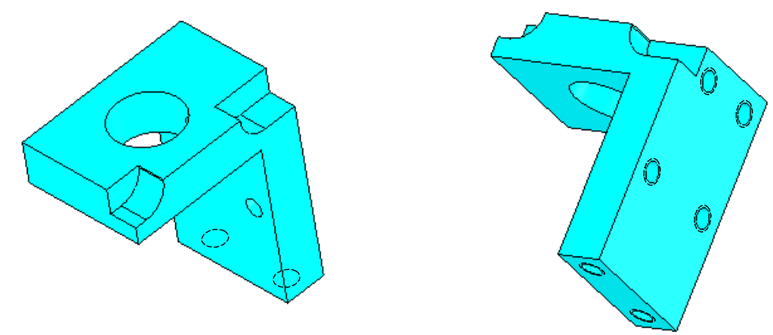

Qty: 3

ITEM NO.	QTY.	Part_Number	DESCRIPTION	VENDOR	MATERIAL
1	1	1002258-003	Syringe Motor Bracket		17-4 Stainless Steel

BILL OF MATERIALS — last updated on: Thursday, January 08, 2009 4:12:28 PM

Shop / Q.C.: Inspector; Shop Foreman; Engineer

NEXT ASSY Description | NEXT ASSY Number

DO NOT SCALE DRAWING

UNLESS OTHERWISE SPECIFIED TOLERANCES ARE:

1 PLACE DIM	2 PLACE DIM	3 PLACE DIM	ANGLES
±1/16	±.01	±.005	±1°

1. DIMENSIONS ARE IN INCHES
2. DIMENSION LIMITS HELD AFTER PLATING
3. REMOVE BURRS & SHARP EDGES .010 MAX
4. MACHINED FILLET RADII .010 TO .020
5. MACHINED DIAMETERS ON A COMMON CENTERLINE CONCENTRIC WITHIN .005
6. PERPENDICULARITY & PARALLELISM OF MACHINED SURFACES .001 PER INCH, MAX .010 INCHES FOR SINGLE SURFACE.
7. SURFACE FINISH TO BE 63 MICRON UNLESS OTHERWISE SPECIFIED

APPROVALS — DATE

ENGINEER: Jason Feldman, 831-775-1837

CHECKED

PROJECT NUMBER: 701312.00

PROJECT: ESP 2G

Monterey Bay Aquarium Research Institute
7700 Sandholdt Road
Moss Landing, CA
95039

syringe motor bracket

SIZE: C | DWG. NO.: 1002258 | REV.: A

CAD FILE: X:\701312 ESP 2G\SolidWorks files\internal structure (1002209)

SHEET 5 OF 13

THE INFORMATION CONTAINED IN THIS DRAWING IS THE SOLE PROPERTY OF MBARI ANY REPRODUCTION IN PART OR WHOLE WITHOUT THE WRITTEN PERMISSION OF MBARI IS PROHIBITED

1002258-005
SYRINGE CAR

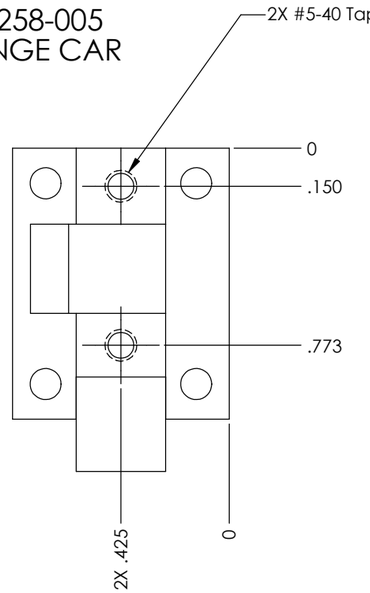

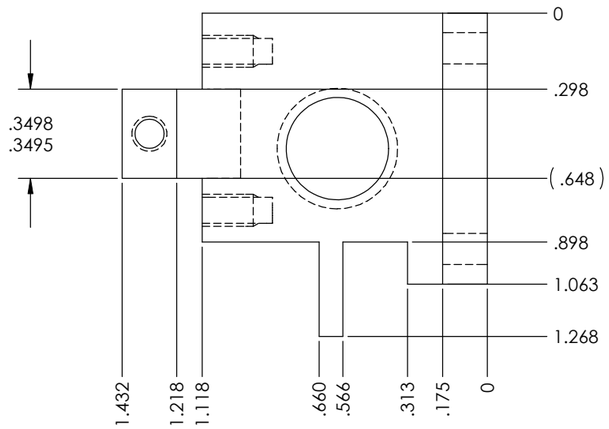

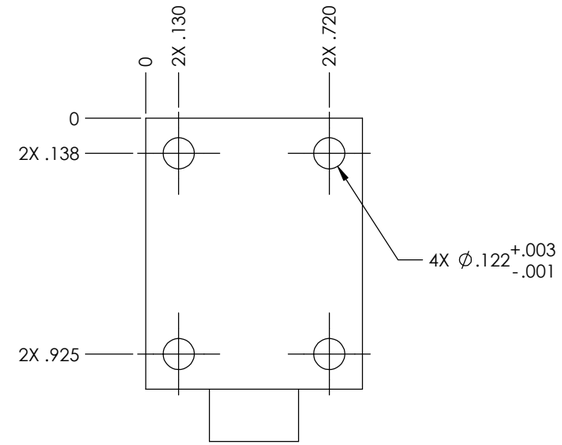

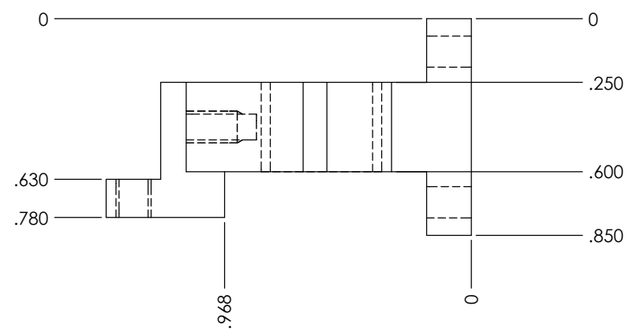

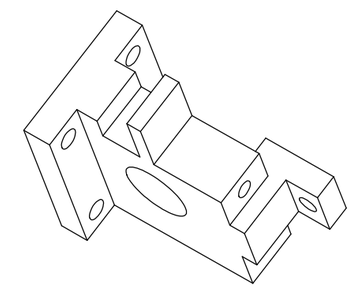

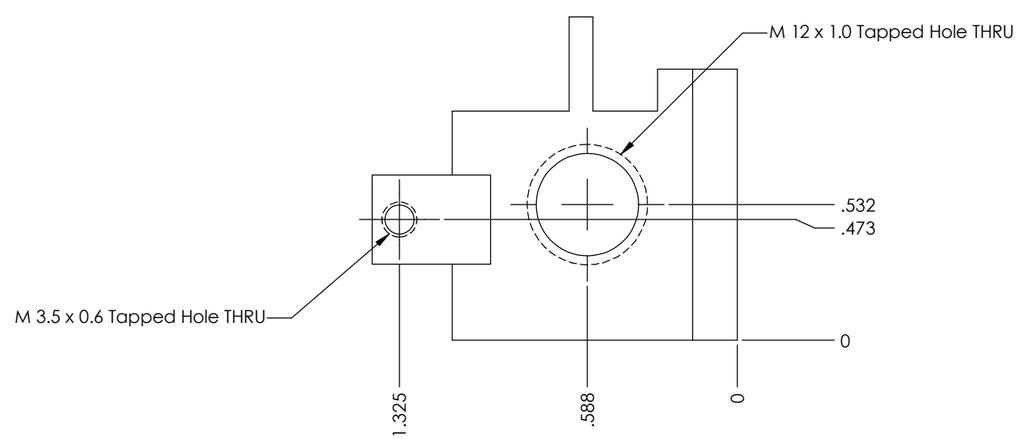

3 ea.

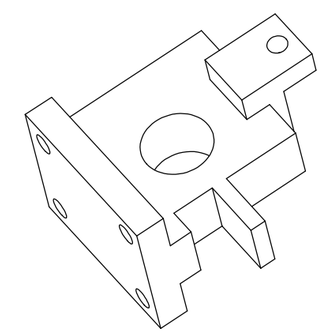

ITEM NO.	QTY.	Part_Number	DESCRIPTION	VENDOR	MATERIAL
1	1	1002258-005	Syringe Arm		17-4 Stainless Steel

BILL OF MATERIALS — last updated on: Thursday, January 08, 2009 4:12:28 PM

Shop / Q.C.: Inspector; Shop Foreman; Engineer; NEXT ASSY Description; NEXT ASSY Number

UNLESS OTHERWISE SPECIFIED TOLERANCES ARE:

1 PLACE DIM	2 PLACE DIM	3 PLACE DIM	ANGLES
±1/16	±.01	±.005	±1°

1. DIMENSIONS ARE IN INCHES
2. DIMENSION LIMITS HELD AFTER PLATING
3. REMOVE BURRS & SHARP EDGES .010 MAX
4. MACHINED FILLET RADII .010 TO .020
5. MACHINED DIAMETERS ON A COMMON CENTERLINE CONCENTRIC WITHIN .OO5
6. PERPENDICULARITY & PARALLELISM OF MACHINED SURFACES .001 PER INCH, MAX .010 INCHES FOR SINGLE SURFACE.
7. SURFACE FINISH TO BE 63 MICRON UNLESS OTHERWISE SPECIFIED

DO NOT SCALE DRAWING

APPROVALS — DATE
ENGINEER: Jason Feldman 831-775-1837
CHECKED

Monterey Bay Aquarium Research Institute
7700 Sandholdt Road
Moss Landing, CA
95039

PROJECT NUMBER: 701312.00
PROJECT: ESP 2G

syringe arm

SIZE: C | DWG. NO.: 1002258 | REV.: A

CAD FILE: X:\701312 ESP 2G\SolidWorks files\internal structure (1002209)

THE INFORMATION CONTAINED IN THIS DRAWING IS THE SOLE PROPERTY OF MBARI ANY REPRODUCTION IN PART OR WHOLE WITHOUT THE WRITTEN PERMISSION OF MBARI IS PROHIBITED

REV.	DESCRIPTION	DATE	APPROVED
A	CHG CONFIGURATIONS TO DEFAULT ONLY	12/06	C.E.
B	Added -012 to the print for the MFB Units	10/15/08	MP

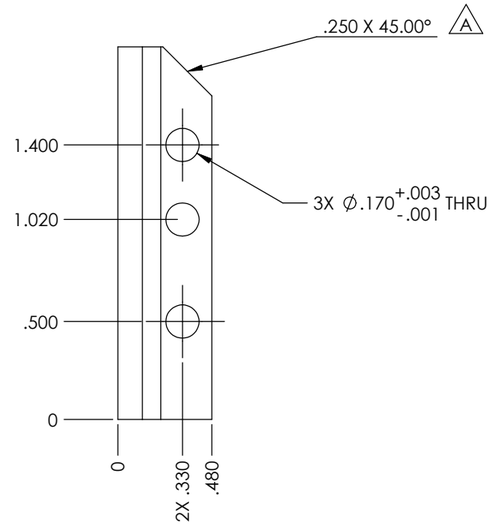

1002258-007
SYRINGE MOUNTING BRACKET - LONG
Mat'l: 6061-T6 Aluminum
Qty: 3

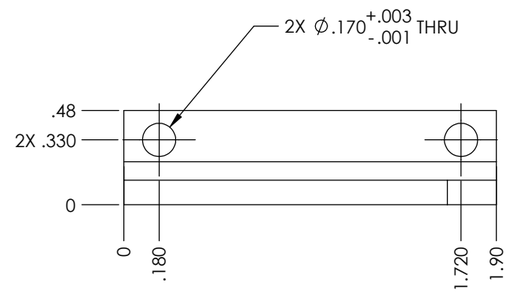

1002258-012
SYRINGE MOUNTING BRACKET
Burkert 3-Way Valve
Mat'l: 6061-T6 Aluminum
Qty: 1

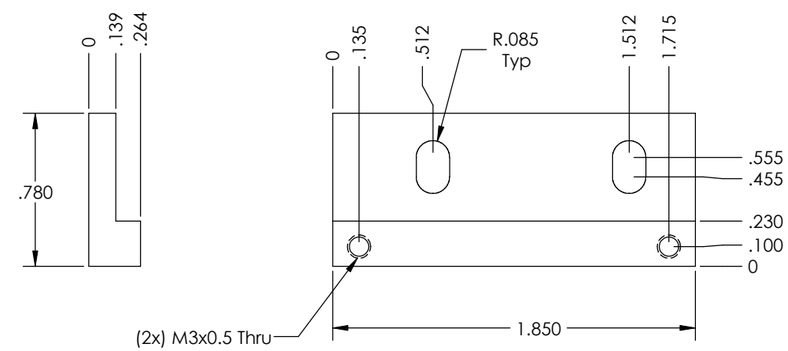

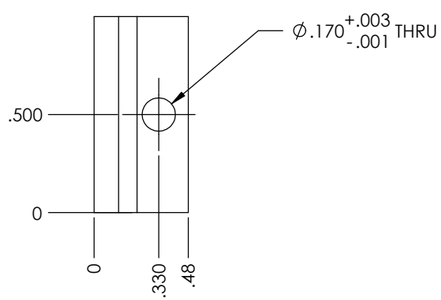

1002258-008
SYRING EMOUNTING BRACKET - SHORT
Mat'l: 6061-T6
Qty: 3

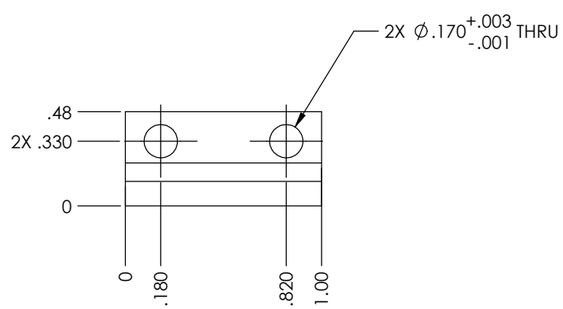

ITEM NO.	QTY.	Part_Number	DESCRIPTION	VENDOR	MATERIAL
1	1	1002258-007	Syringe Mounting Bracket_Long		Aluminum extrusion

BILL OF MATERIALS

last updated on: Thursday, January 08, 2009 4:12:28 PM

Shop / Q.C.
Inspector
Shop Foreman
Engineer
NEXT ASSY Description | NEXT ASSY Number
DO NOT SCALE DRAWING

UNLESS OTHERWISE SPECIFIED TOLERANCES ARE:
1 PLACE DIM ±1/16 | 2 PLACE DIM ±.01 | 3 PLACE DIM ±.005 | ANGLES ±1°

1. DIMENSIONS ARE IN INCHES
2. DIMENSION LIMITS HELD AFTER PLATING
3. REMOVE BURRS & SHARP EDGES .010 MAX
4. MACHINED FILLET RADII .010 TO .020
5. MACHINED DIAMETERS ON A COMMON CENTERLINE CONCENTRIC WITHIN .005
6. PERPENDICULARITY & PARALLELISM OF MACHINED SURFACES .001 PER INCH, MAX .010 INCHES FOR SINGLE SURFACE.
7. SURFACE FINISH TO BE 63 MICRON UNLESS OTHERWISE SPECIFIED

APPROVALS | DATE
ENGINEER Jason Feldman 831-775-1837
CHECKED

Monterey Bay Aquarium Research Institute
7700 Sandholdt Road
Moss Landing, CA
95039

PROJECT NUMBER 701312.00
PROJECT ESP 2G
syringe
SIZE C | DWG. NO. 1002258 | REV. B
CAD FILE: X:\701312 ESP 2G\SolidWorks files\internal structure (1002209)
SHEET 7 OF 13

THE INFORMATION CONTAINED IN THIS DRAWING IS THE SOLE PROPERTY OF MBARI.ANY REPRODUCTION IN PART OR WHOLE WITHOUT THE WRITTEN PERMISSION OF MBARI IS PROHIBITED.

REVISIONS			
REV.	DESCRIPTION	DATE	APPROVED
		X/XX/00	J.E.

STOCK PART

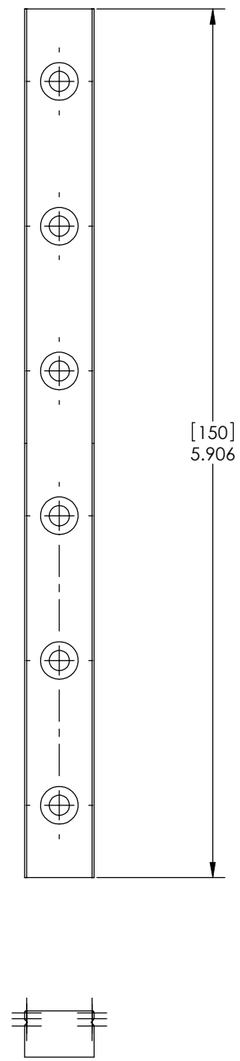

MOD. PART

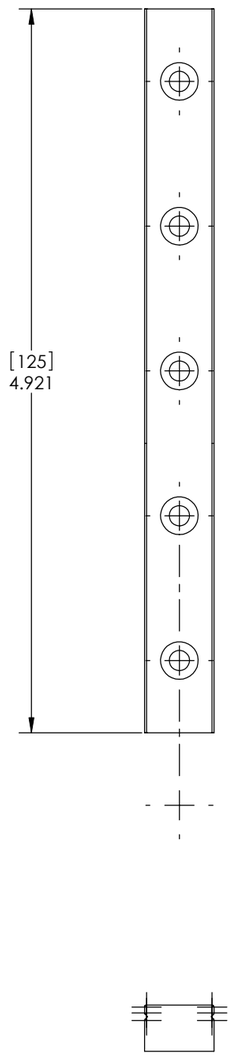

1002258-009

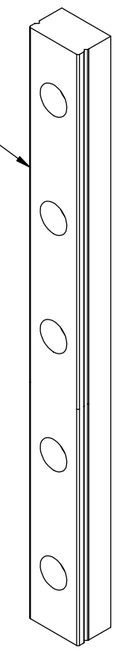

PART MODIFICATION DRAWING

ITEM NO.	QTY.	Part_Number	DESCRIPTION	Vendor	MATERIAL
1	1	LWL12C1R150BPS2	Linear Bearing Track	IKO International, Inc	Stainless Steel

BILL OF MATERIALS

Shop / Q.C.

Inspector	
Shop Foreman	
Engineer	
NEXT ASSY Description	NEXT ASSY Number
APPLICATION	

UNLESS OTHERWISE SPECIFIED TOLERANCES ARE:

1 PLACE DEC.	2 PLACE DEC.	3 PLACE DEC.	ANGLE
±0.1	±0.01	±0.005	±1°

1. DIMENSIONS ARE IN INCHES.
2. DIMENSION LIMITS HELD AFTER PLATING.
3. REMOVE BURRS AND SHARP EDGES .015 MAX.
4. MACHINED FILLET RADII .015-.030.
5. MACHINED DIAMETERS ON A COMMON CENTERLINE CONCENTRIC WITHIN .005
6. PERPENDICULARITY & PARALLELISM OF MACHINED SURFACES .002 PER INCH, MAX .012 INCHES FOR SINGLE SURFACE.

DO NOT SCALE DRAWING

APPROVALS	DATE
DRAWN J. ERICKSON	10/19/06
ENGINEER J. ERICKSON	10/19/06
CHECKED	
PROJECT No. 703506	
PROJECT Name ESP	
WEIGHT	

Monterey Bay Aquarium Research Institute
MBARI
7700 Sandholdt Rd.
Moss Landing, CA 95039
PH: (831) 775-1700

DEEP ESP
1002258 (syringe_assem)_LINEAR TRACK

SIZE C | DWG. NO. 1002258.DWG | REV.

SCALE | CAD FILE: MECH ENG ON TORNADO | SHEET 1 OF 1

NOTES: (CONT. FROM TITLE BLOCK)

THE INFORMATION CONTAINED IN THIS DRAWING IS THE SOLE PROPERTY OF MBARI ANY REPRODUCTION IN PART OR WHOLE WITHOUT THE WRITTEN PERMISSION OF MBARI IS PROHIBITED.

REVISIONS			
REV.	DESCRIPTION	DATE	APPROVED
	INITIAL RELEASE	X/XX/00	J.E.

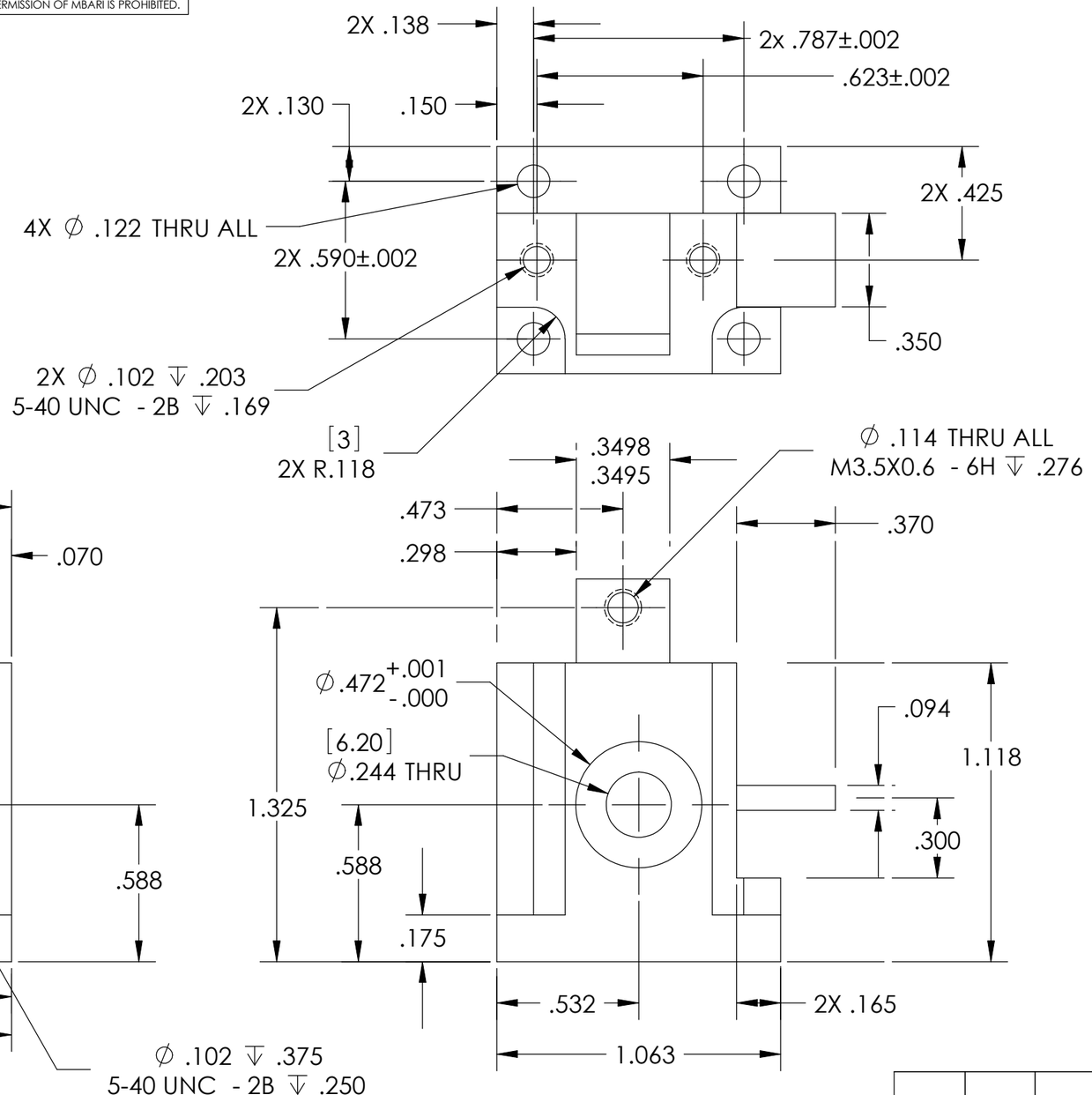

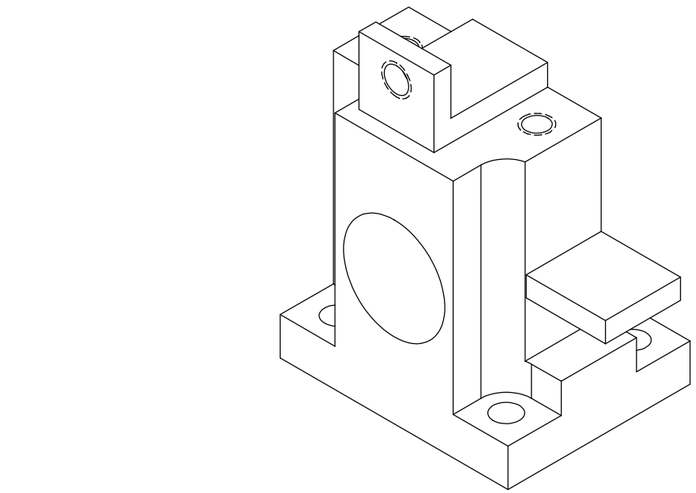

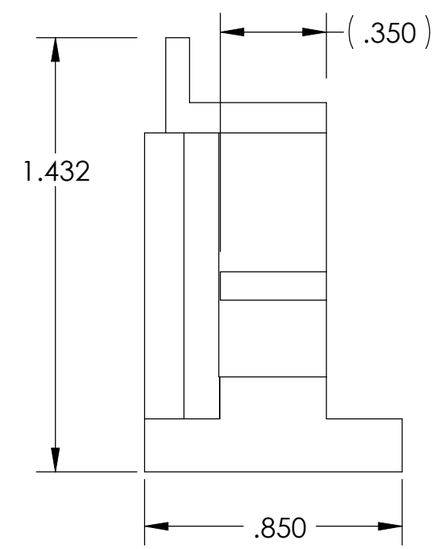

NOTES: (CONT. FROM TITLE BLOCK)

ITEM NO.	QTY.	PART NO.	DESCRIPTION	VENDOR	MATERIAL SPECIFICATION

BILL OF MATERIALS

Shop / Q.C.	
Inspector	
Shop Foreman	
Engineer	
NEXT ASSY Description	NEXT ASSY Number
Application	

UNLESS OTHERWISE SPECIFIED TOLERANCES ARE:

1 PLACE DIM ±1/16	2 PLACE DIM ±.02	3 PLACE DIM ±.005	ANGLES ±1°

1. DIMENSIONS ARE IN INCHES
2. DIMENSION LIMITS HELD AFTER PLATING.
3. REMOVE BURRS AND SHARP EDGES .015 MAX.
4. MACHINED FILLET RADII .0150-.030.
5. MACHINED DIAMETERS ON A COMMON CENTERLINE CONCENTRIC WITHIN .005
6. PERPENDICULARITY & PARALLELISM OF MACHINED SURFACES .002 PER INCH. MAX .012 INCHES FOR SINGLE SURFACE.

DO NOT SCALE DRAWING

APPROVALS	DATE
DRAWN J. ERICKSON	X/XX/00
ENGINEER J. ERICKSON	X/XX/00
CHECKED	
PROJECT NO. XXX	
PROJECT ZZZZZZZZ	
WEIGHT	

Monterey Bay Aquarium Research Institute
MBARI
7700 Sandholdt RD.
Moss Landing, CA 95039
PH: (831) 775-1700

PROJECT NAME
1002258 (syringe_assem)

SIZE	DWG. NO.	REV.
B	100XXXDWG	

SCALE 2:1 | CAD FILE: MECH ENG ON TORNADO | SHEET 9 OF 13

THE INFORMATION CONTAINED IN THIS DRAWING IS THE SOLE PROPERTY OF MBARI ANY REPRODUCTION IN PART OR WHOLE WITHOUT THE WRITTEN PERMISSION OF MBARI IS PROHIBITED.

REVISIONS			
REV.	DESCRIPTION	DATE	APPROVED
	INITIAL RELEASE	X/XX/00	J.E.

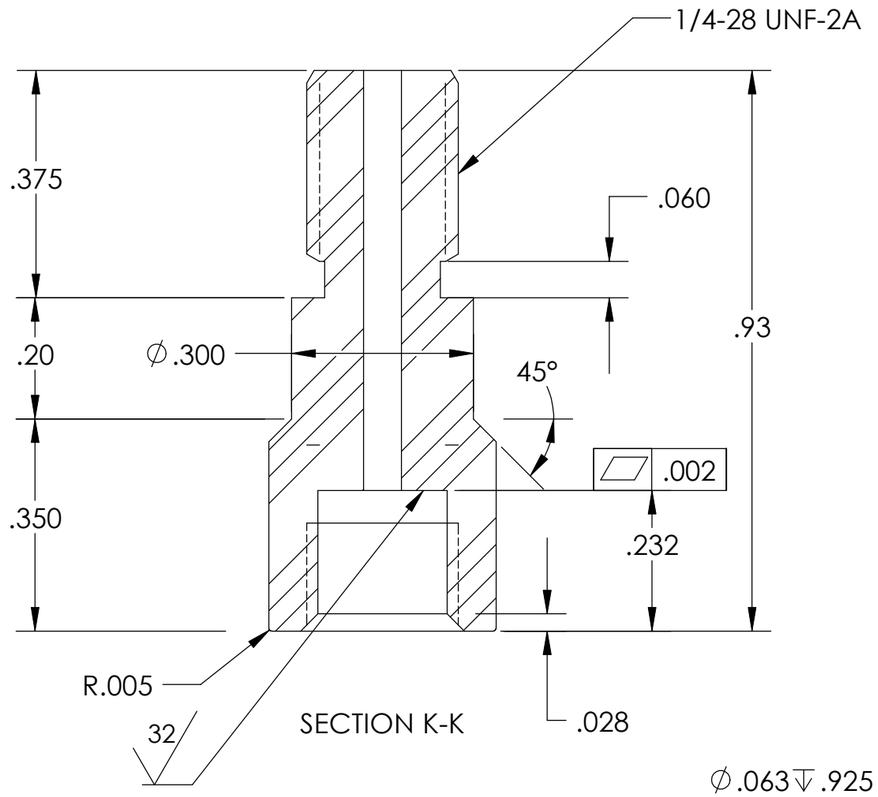

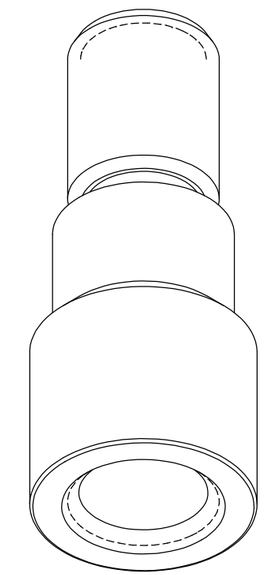

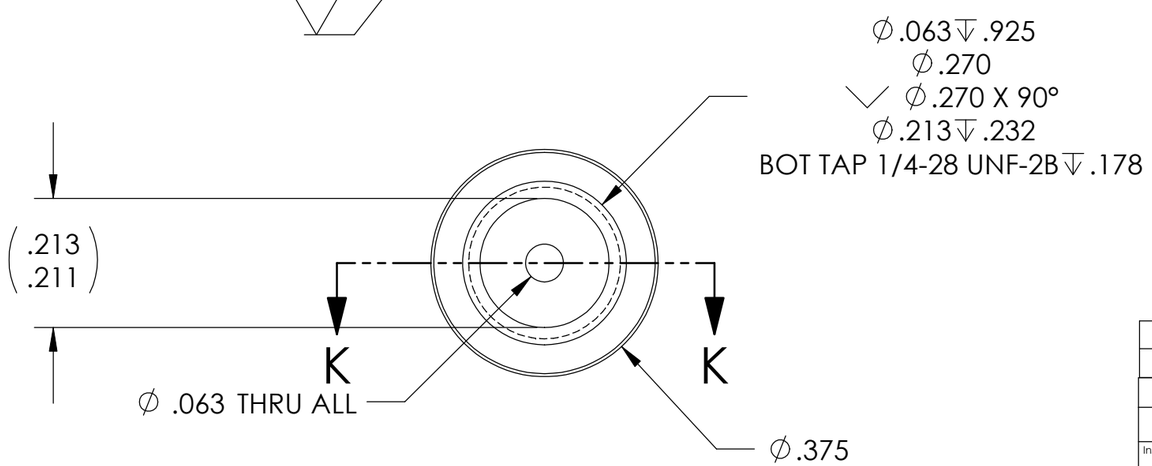

NOTES: (CONT. FROM TITLE BLOCK)

ITEM NO.	QTY.	Part_Number	DESCRIPTION	VENDOR	MATERIAL
1	1	1002258-010	Kloehn 25ml adaptor		PEEK

BILL OF MATERIALS

Shop / Q.C.	
Inspector	
Shop Foreman	
Engineer	
NEXT ASSY Description	NEXT ASSY Number
Application	

UNLESS OTHERWISE SPECIFIED TOLERANCES ARE:

1 PLACE DIM ±1/16	2 PLACE DIM ±.02	3 PLACE DIM ±.005	ANGLES ±1°

1. DIMENSIONS ARE IN INCHES
2. DIMENSION LIMITS HELD AFTER PLATING.
3. REMOVE BURRS AND SHARP EDGES .015 MAX.
4. MACHINED FILLET RADII .0150-.030.
5. MACHINED DIAMETERS ON A COMMON CENTERLINE CONCENTRIC WITHIN .005
6. PERPENDICULARITY & PARALLELISM OF MACHINED SURFACES .002 PER INCH. MAX .012 INCHES FOR SINGLE SURFACE.

DO NOT SCALE DRAWING

APPROVALS		DATE
DRAWN	J. ERICKSON	11/14/06
ENGINEER	J. ERICKSON	11/14/06
CHECKED		
PROJECT NO.	703506	
PROJECT	ESP	
WEIGHT		

Monterey Bay Aquarium Research Institute
MBARI
7700 Sandholdt RD.
Moss Landing, CA 95039
PH: (831) 775-1700

DEEP ESP_SYRINGE ASSEMBLY
1002258-010 25ml Syringe Adaptor

SIZE	DWG. NO.	REV.
B	1002258.DWG	

SCALE 4:1 | CAD FILE: MECH ENG ON TORNADO | SHEET 10 OF 13

THE INFORMATION CONTAINED IN THIS DRAWING IS THE SOLE PROPERTY OF MBARI ANY REPRODUCTION IN PART OR WHOLE WITHOUT THE WRITTEN PERMISSION OF MBARI IS PROHIBITED.

REVISIONS			
REV.	DESCRIPTION	DATE	APPROVED
	INITIAL RELEASE	X/XX/00	J.E.

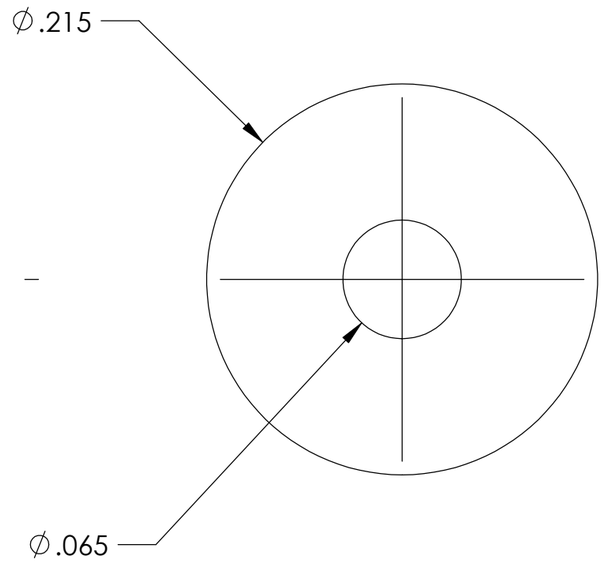

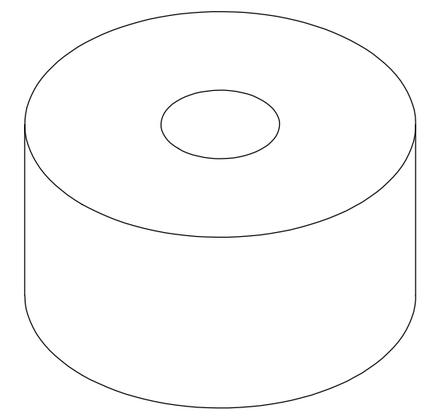

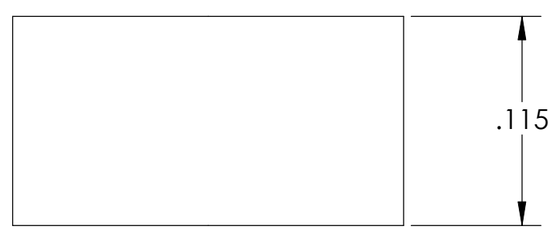

NOTES:(CONT. FROM TITLE BLOCK)

ITEM NO.	QTY.	Part_Number	DESCRIPTION	VENDOR	MATERIAL
1	1	#18031	Syringe Thick Teflon Seal Washer		PTFE

ITEM NO.	QTY.	PART NO.	DESCRIPTION	VENDOR	MATERIAL SPECIFICATION

BILL OF MATERIALS

Shop / Q.C.	
Inspector	
Shop Foreman	
Engineer	
NEXT ASSY Description	NEXT ASSY Number
Application	

UNLESS OTHERWISE SPECIFIED TOLERANCES ARE:

1 PLACE DIM ±1/16	2 PLACE DIM ±.02	3 PLACE DIM ±.005	ANGLES ±1°

1. DIMENSIONS ARE IN INCHES
2. DIMENSION LIMITS HELD AFTER PLATING.
3. REMOVE BURRS AND SHARP EDGES .015 MAX.
4. MACHINED FILLET RADII .0150-.030.
5. MACHINED DIAMETERS ON A COMMON CENTERLINE CONCENTRIC WITHIN .OO5
6. PERPENDICULARITY & PARALLELISM OF MACHINED SURFACES .002 PER INCH. MAX .012 INCHES FOR SINGLE SURFACE.

DO NOT SCALE DRAWING

APPROVALS		DATE
DRAWN	J. ERICKSON	11/15/06
ENGINEER	J. ERICKSON	11/15/06
CHECKED		
PROJECT NO.	703506	
PROJECT	ESP	
WEIGHT		

Monterey Bay Aquarium Research Institute
MBARI
7700 Sandholdt RD.
Moss Landing, CA 95039
PH: (831) 775-1700

DEEP ESP

1002258-011 Syring Thick Teflon Seal

SIZE	DWG. NO.	REV.
B	1002258.DWG	

SCALE 12:1 | CAD FILE: MECH ENG ON TORNADO | SHEET 11 OF 13

THE INFORMATION CONTAINED IN THIS DRAWING IS THE SOLE PROPERTY OF MBARI ANY REPRODUCTION IN PART OR WHOLE WITHOUT THE WRITTEN PERMISSION OF MBARI IS PROHIBITED.

REVISIONS			
REV.	DESCRIPTION	DATE	APPROVED
	INITIAL RELEASE		

1002258-013
Burkert 3-Way

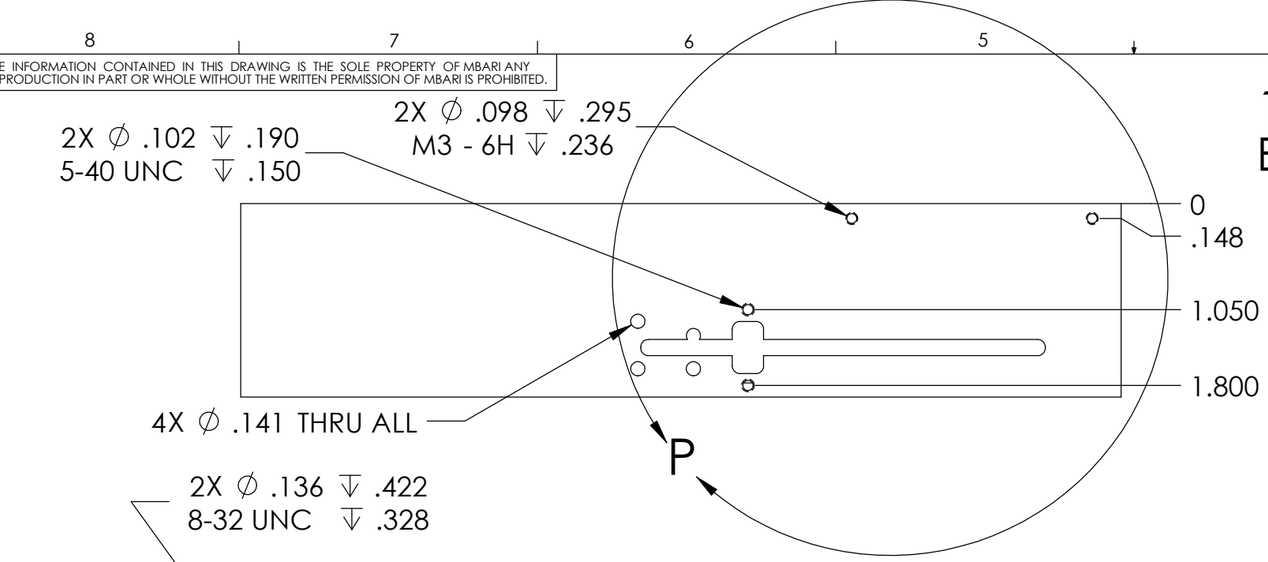

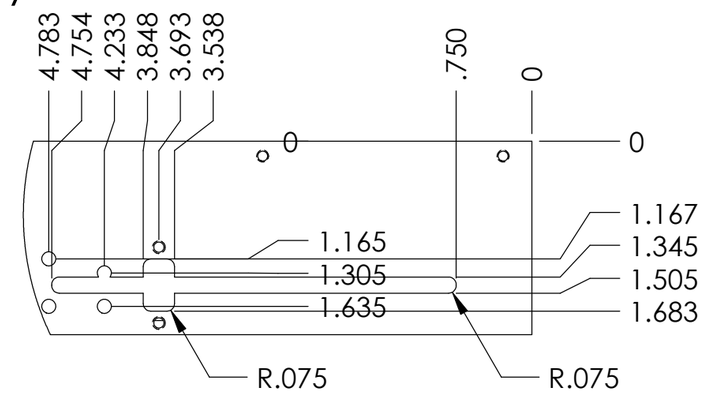

DETAIL P
SCALE 1 : 1.5

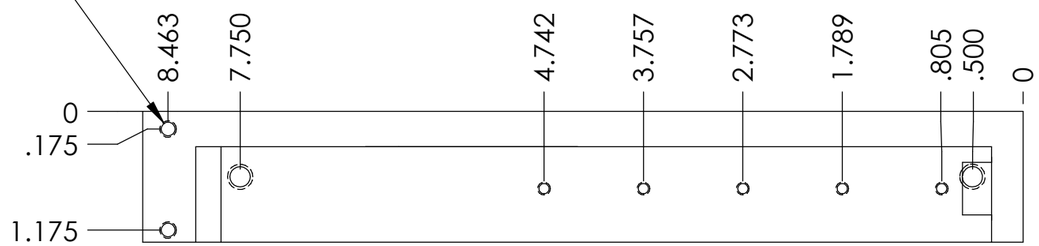

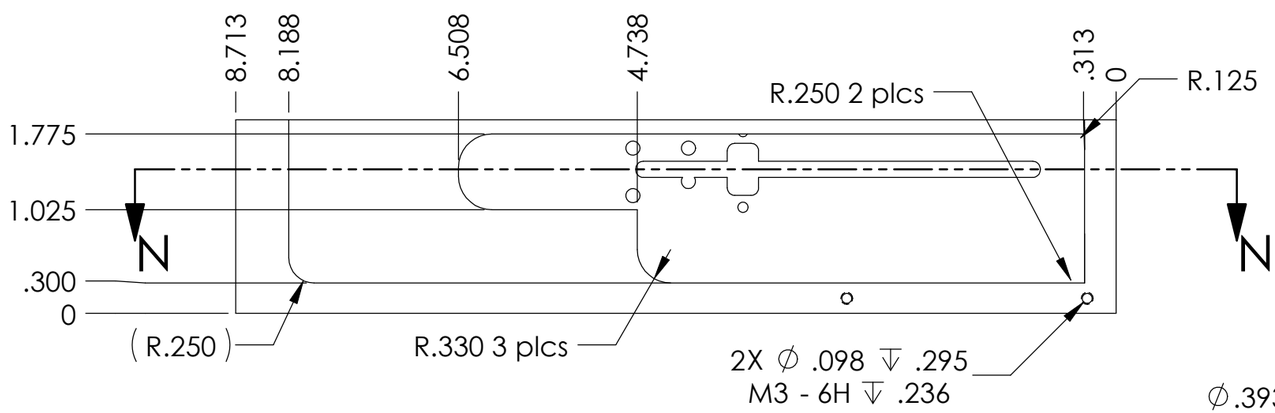

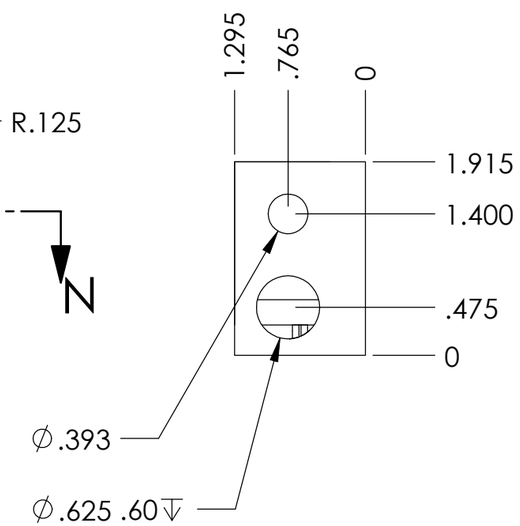

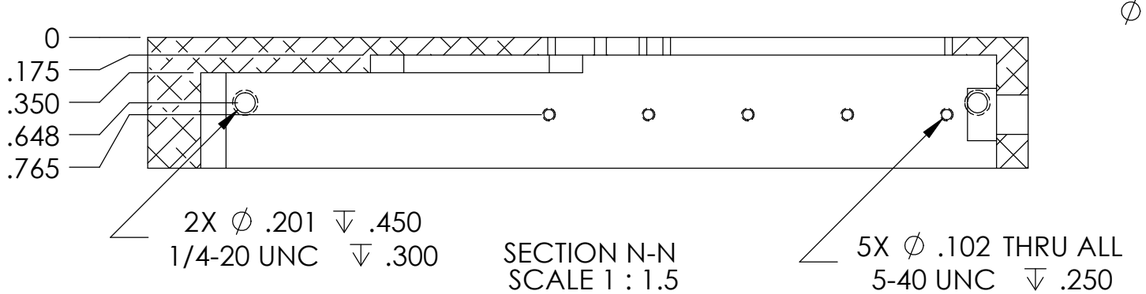

SECTION N-N
SCALE 1 : 1.5

File Location:

BILL OF MATERIALS

Shop / Q.C.	
Inspector	
Shop Foreman	
Engineer	
NEXT ASSY Description	NEXT ASSY Number
Application	

UNLESS OTHERWISE SPECIFIED TOLERANCES ARE:

1 PLACE DIM ±1/16	2 PLACE DIM ±.02	3 PLACE DIM ±.005	ANGLES ±1°

1. DIMENSIONS ARE IN INCHES
2. DIMENSION LIMITS HELD AFTER PLATING.
3. REMOVE BURRS AND SHARP EDGES .015 MAX.
4. MACHINED FILLET RADII .0150-.030.
5. MACHINED DIAMETERS ON A COMMON CENTERLINE CONCENTRIC WITHIN .005
6. PERPENDICULARITY & PARALLELISM OF MACHINED SURFACES .002 PER INCH. MAX .012 INCHES FOR SINGLE SURFACE.

DO NOT SCALE DRAWING

APPROVALS		DATE
DRAWN	Parker	9/27/00
ENGINEER	Parker	9/27/00
CHECKED		
PROJECT NO.	701312	
PROJECT	ESP	
WEIGHT		

Monterey Bay Aquarium Research Institute
MBARI
7700 Sandholdt RD.
Moss Landing, CA 95039
PH: (831) 775-1700

1002258 (syringe_assem)

SIZE	DWG. NO.	REV.
B	1002258	A

SCALE 1:2 | CAD FILE: MECH ENG ON TORNADO | SHEET 12 OF 13

THE INFORMATION CONTAINED IN THIS DRAWING IS THE SOLE PROPERTY OF MBARI ANY REPRODUCTION IN PART OR WHOLE WITHOUT THE WRITTEN PERMISSION OF MBARI IS PROHIBITED.

REVISIONS			
REV.	DESCRIPTION	DATE	APPROVED
	INITIAL RELEASE		

1002258-014
Syringe Shoulder Screw Slider
Material: 17-4 Qty. 1

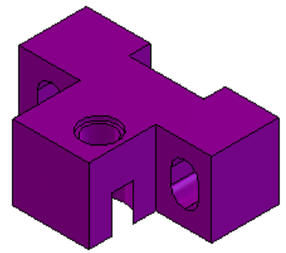

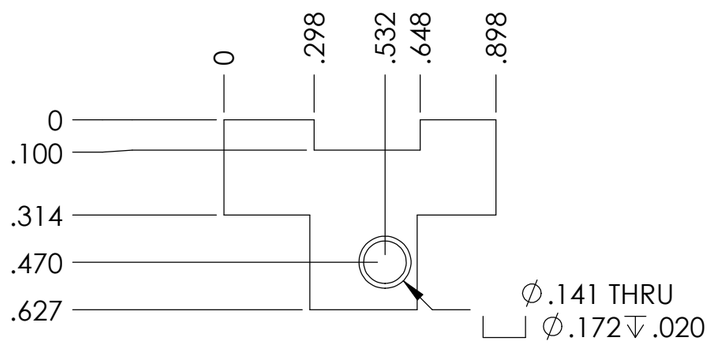

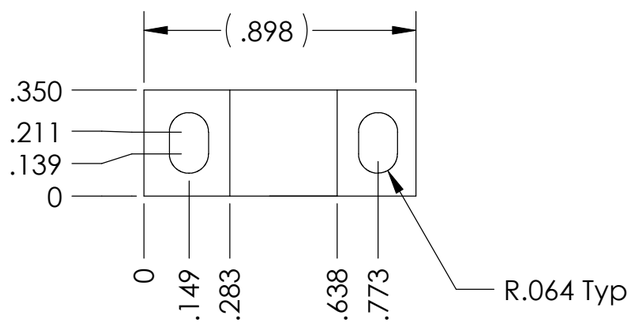

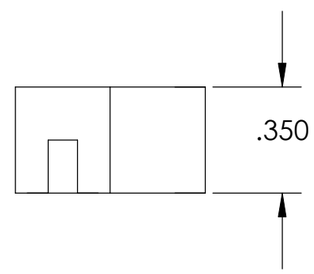

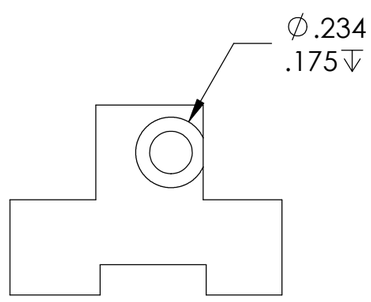

BILL OF MATERIALS

Shop / Q.C.	
Inspector	
Shop Foreman	
Engineer	
NEXT ASSY Description	NEXT ASSY Number
Application	

UNLESS OTHERWISE SPECIFIED TOLERANCES ARE:

1 PLACE DIM ±1/16	2 PLACE DIM ±.02	3 PLACE DIM ±.005	ANGLES ±1°

1. DIMENSIONS ARE IN INCHES
2. DIMENSION LIMITS HELD AFTER PLATING.
3. REMOVE BURRS AND SHARP EDGES .015 MAX.
4. MACHINED FILLET RADII .0150-.030.
5. MACHINED DIAMETERS ON A COMMON CENTERLINE CONCENTRIC WITHIN .OO5
6. PERPENDICULARITY & PARALLELISM OF MACHINED SURFACES .002 PER INCH, MAX .012 INCHES FOR SINGLE SURFACE.

DO NOT SCALE DRAWING

APPROVALS		DATE
DRAWN	Parker	10/15/08
ENGINEER	Parker	10/15/08
CHECKED		
PROJECT NO.	701312	
PROJECT	ESP	
WEIGHT		

Monterey Bay Aquarium Research Institute
MBARI
7700 Sandholdt RD.
Moss Landing, CA 95039
PH: (831) 775-1700

1002258 (syringe_assem)

SIZE	DWG. NO.	REV.
B	1002258	

SCALE 3.3:1 | CAD FILE: MECH ENG ON TORNADO | SHEET 13 OF 13

File Location: