THE INFORMATION CONTAINED IN THIS DRAWING IS THE SOLE PROPERTY OF MBARI ANY REPRODUCTION IN PART OR WHOLE WITHOUT THE WRITTEN PERMISSION OF MBARI IS PROHIBITED

Manipulator - Assembly

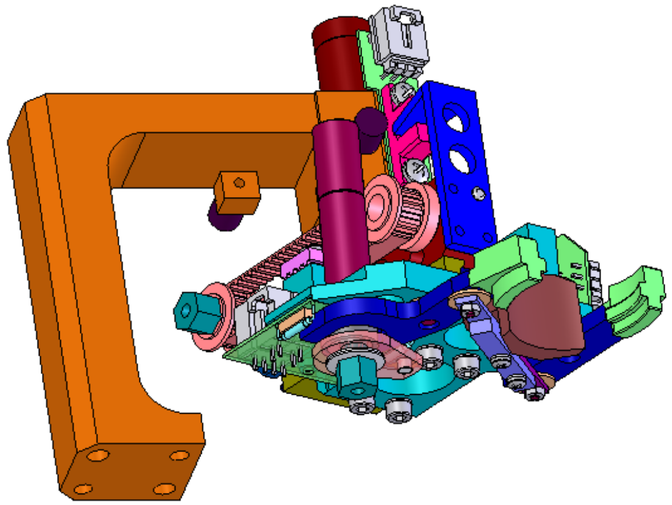

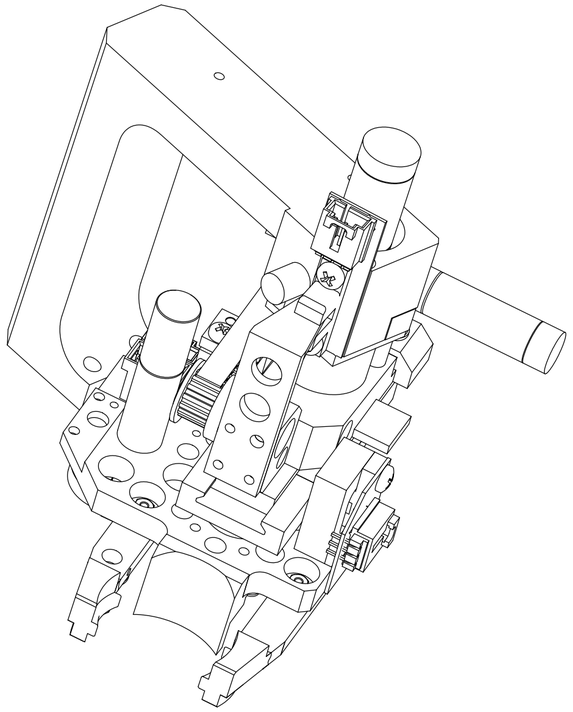

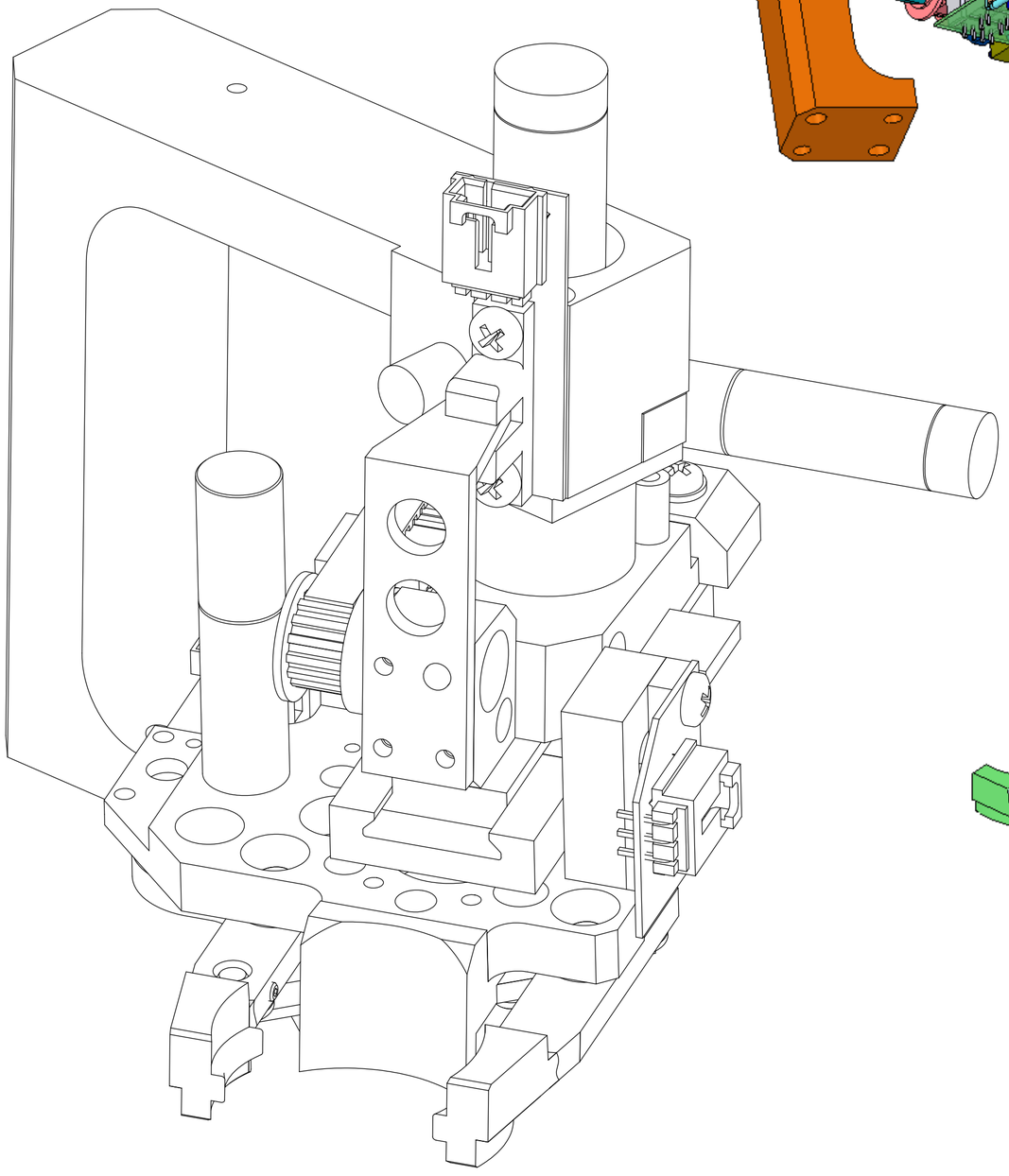

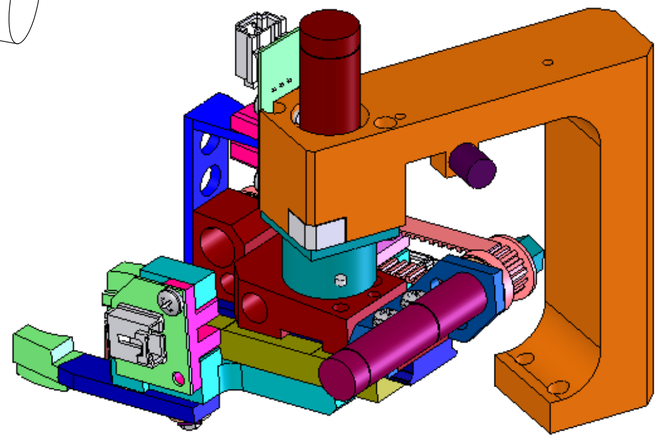

BILL OF MATERIALS

last updated on: Wednesday, April 19, 2006 2:33:02 PM

Shop / Q.C.	
Inspector	
Shop Foreman	
Engineer	
NEXT ASSY Description	NEXT ASSY Number
DO NOT SCALE DRAWING	

UNLESS OTHERWISE SPECIFIED TOLERANCES ARE:

2 PLACE DIM	3 PLACE DIM	4 PLACE DIM	ANGLES
±.01	±.005	±.0005	±1°

1. DIMENSIONS ARE IN INCHES
2. DIMENSION LIMITS HELD AFTER PLATING
3. REMOVE BURRS & SHARP EDGES .010 MAX
4. MACHINED FILLET RADII .000 TO .015
5. MACHINED DIAMETERS ON A COMMON CENTERLINE CONCENTRIC WITHIN .OO5
6. PERPENDICULARITY & PARALLELISM OF MACHINED SURFACES .001 PER INCH, MAX .003 INCHES FOR SINGLE SURFACE.
7. SURFACE FINISH TO BE 32 MICRON UNLESS OTHERWISE SPECIFIED

APPROVALS	DATE
ENGINEER Jason Feldman 831-775-1837	
CHECKED	
PROJECT NUMBER 701312.00	
PROJECT ESP 2G	

Monterey Bay Aquarium Research Institute
M B A R I
7700 Sandholdt Road
Moss Landing, CA
95039

manipulator

SIZE	DWG. NO.	REV.
C	1002451	D

CAD FILE: X:\701312 ESP 2G\SolidWorks files\internal structure (1002209)

THE INFORMATION CONTAINED IN THIS DRAWING IS THE SOLE PROPERTY OF MBARI ANY REPRODUCTION IN PART OR WHOLE WITHOUT THE WRITTEN PERMISSION OF MBARI IS PROHIBITED

MANIPULATOR MOUNT - assembly

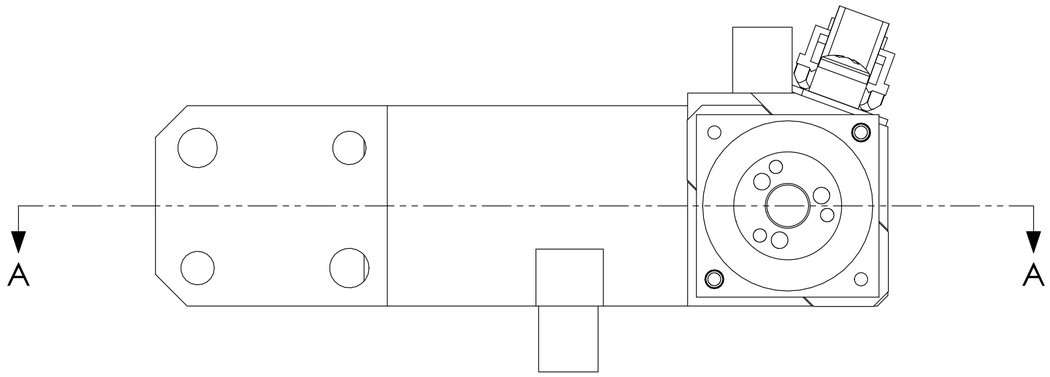

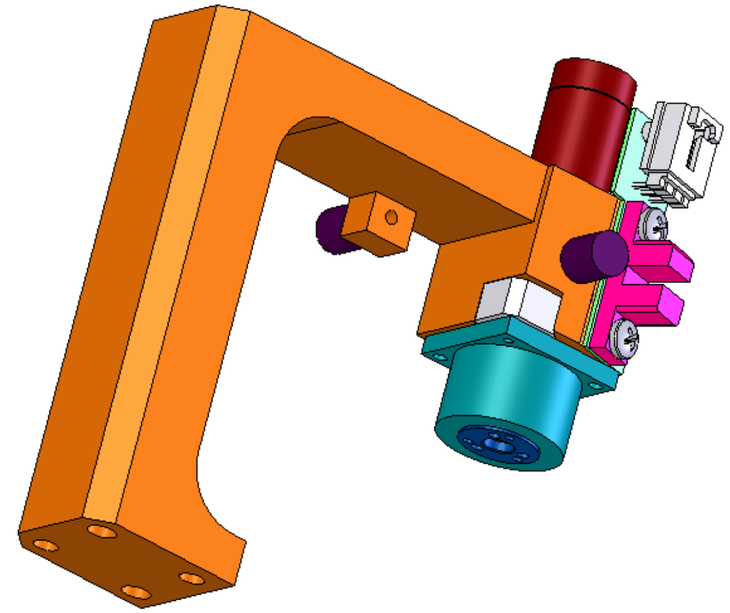

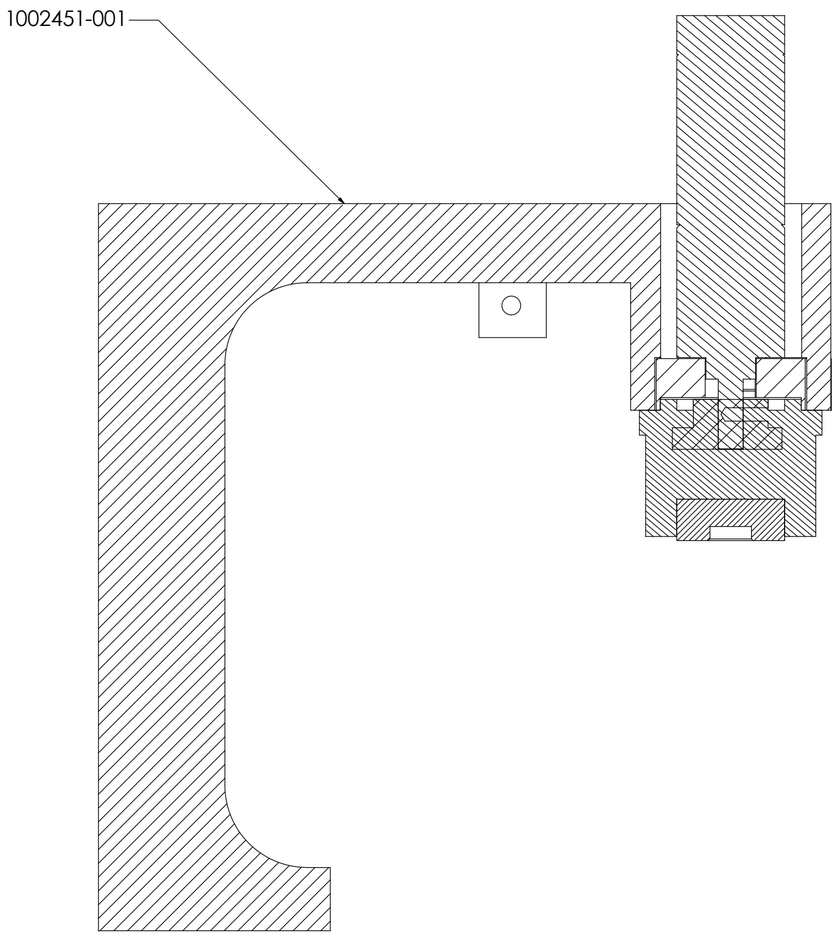

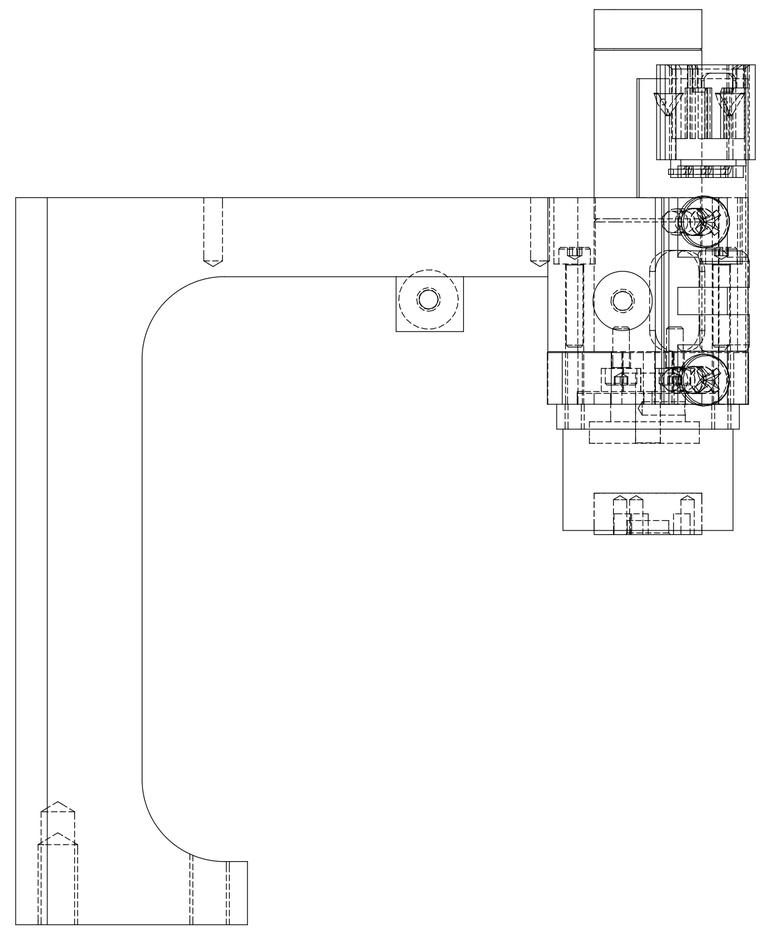

SECTION A-A

BILL OF MATERIALS

last updated on: Wednesday, April 19, 2006 2:33:02 PM

Shop / Q.C.	
Inspector	
Shop Foreman	
Engineer	
NEXT ASSY Description	NEXT ASSY Number
DO NOT SCALE DRAWING	

UNLESS OTHERWISE SPECIFIED TOLERANCES ARE:

2 PLACE DIM	3 PLACE DIM	4 PLACE DIM	ANGLES
±.01	±.005	±.0005	±1°

1. DIMENSIONS ARE IN INCHES
2. DIMENSION LIMITS HELD AFTER PLATING
3. REMOVE BURRS & SHARP EDGES .010 MAX
4. MACHINED FILLET RADII .000 TO .015
5. MACHINED DIAMETERS ON A COMMON CENTERLINE CONCENTRIC WITHIN .OO5
6. PERPENDICULARITY & PARALLELISM OF MACHINED SURFACES .001 PER INCH, MAX .003 INCHES FOR SINGLE SURFACE.
7. SURFACE FINISH TO BE 32 MICRON UNLESS OTHERWISE SPECIFIED

APPROVALS DATE

ENGINEER
Jason Feldman
831-775-1837

CHECKED

PROJECT NUMBER
701312.00

PROJECT
ESP 2G

Monterey Bay Aquarium Research Institute
M B A R I
7700 Sandholdt Road
Moss Landing, CA
95039

manipulator

SIZE	DWG. NO.	REV.
C	1002451	D

CAD FILE: X:\701312 ESP 2G\SolidWorks files\internal structure (1002209)

SHEET 2 OF 19

THE INFORMATION CONTAINED IN THIS DRAWING IS THE SOLE PROPERTY OF MBARI ANY REPRODUCTION IN PART OR WHOLE WITHOUT THE WRITTEN PERMISSION OF MBARI IS PROHIBITED

REVISIONS				
ZONE	REV.	DESCRIPTION	DATE	APPROVED
-	D	Through hole and slot for new mount scheme	02/09/06	-

1002451-001
MANIPULATOR MOUNT
Material: 6061-T6

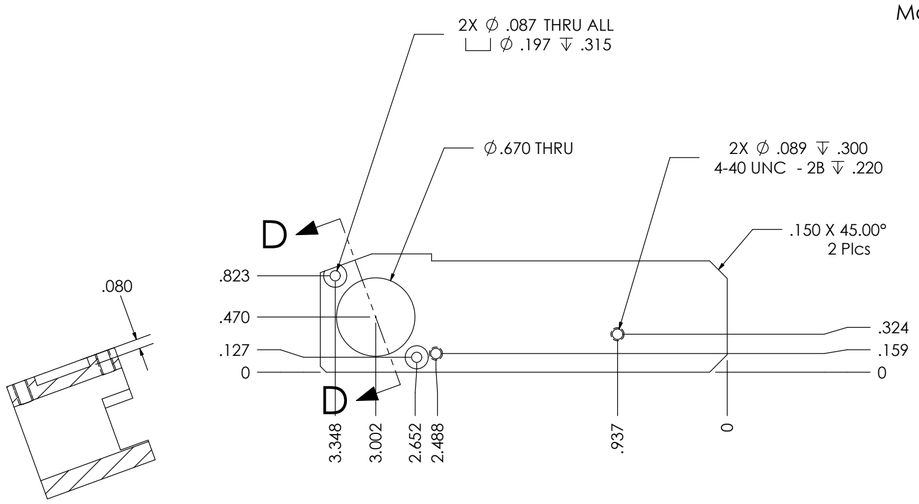

SECTION D-D

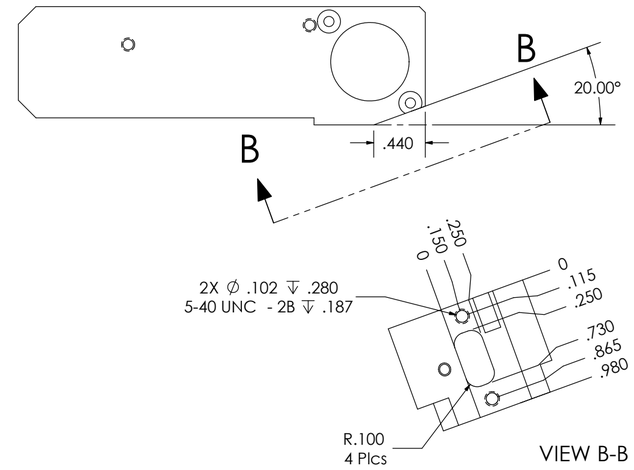

VIEW B-B

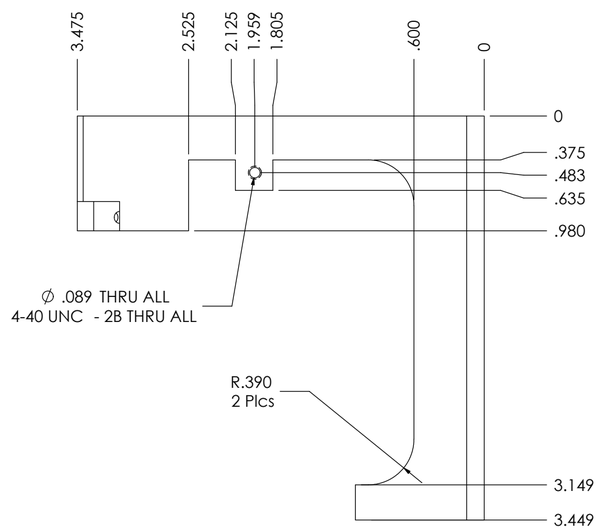

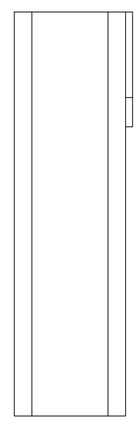

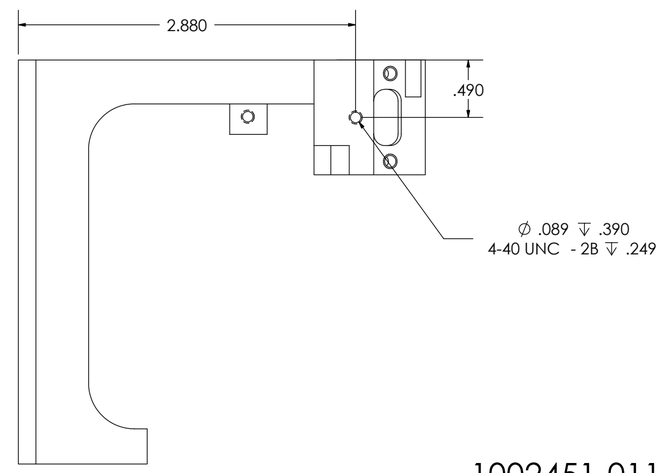

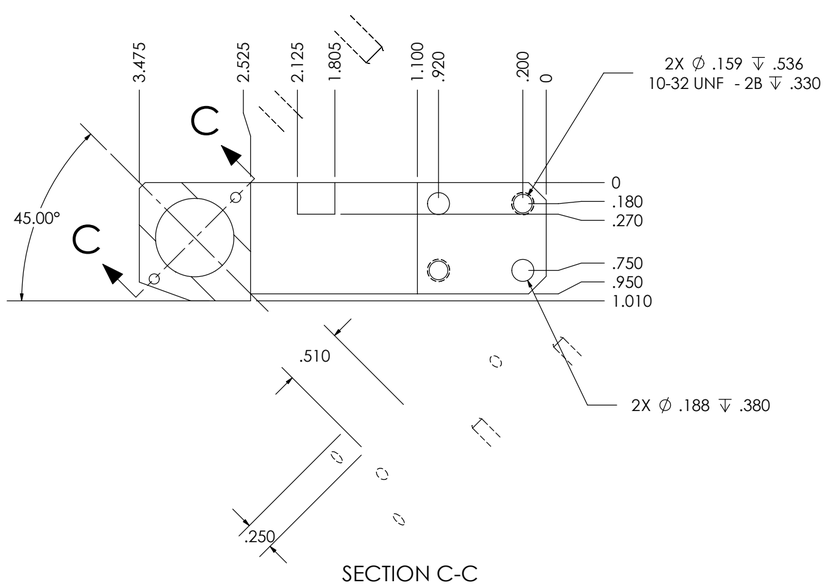

SECTION C-C

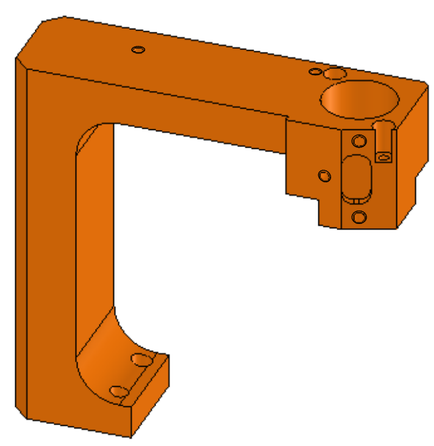

1002451-011 (Spacer)
Material: 6061-T6

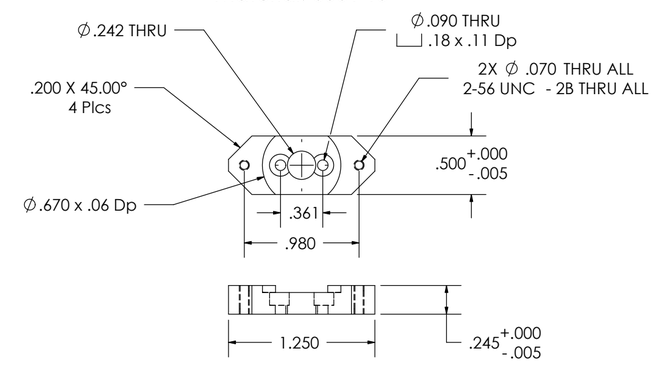

ITEM NO.	PART NUMBER	DESCRIPTION	MATERIAL	QTY.
1	1002451-001			1
2	1002451-011			1

BILL OF MATERIALS — last updated on: Wednesday, April 19, 2006 2:33:02 PM

Shop / Q.C.: Inspector; Shop Foreman; Engineer; NEXT ASSY Description; NEXT ASSY Number

DO NOT SCALE DRAWING

UNLESS OTHERWISE SPECIFIED TOLERANCES ARE:

2 PLACE DIM ±.01	3 PLACE DIM ±.005	4 PLACE DIM ±.0005	ANGLES ±1°

1. DIMENSIONS ARE IN INCHES
2. DIMENSION LIMITS HELD AFTER PLATING
3. REMOVE BURRS & SHARP EDGES .010 MAX
4. MACHINED FILLET RADII .000 TO .015
5. MACHINED DIAMETERS ON A COMMON CENTERLINE CONCENTRIC WITHIN .005
6. PERPENDICULARITY & PARALLELISM OF MACHINED SURFACES .001 PER INCH, MAX .003 INCHES FOR SINGLE SURFACE.
7. SURFACE FINISH TO BE 32 MICRON UNLESS OTHERWISE SPECIFIED

APPROVALS — DATE

ENGINEER: Jason Feldman, 831-775-1837

CHECKED

PROJECT NUMBER: 701312.00

PROJECT: ESP 2G

Monterey Bay Aquarium Research Institute
MBARI
7700 Sandholdt Road
Moss Landing, CA
95039

manipulator

SIZE: C — DWG. NO. 1002451 — REV. D

CAD FILE: X:\701312 ESP 2G\SolidWorks files\internal structure (1002209)

THE INFORMATION CONTAINED IN THIS DRAWING IS THE SOLE PROPERTY OF MBARI ANY REPRODUCTION IN PART OR WHOLE WITHOUT THE WRITTEN PERMISSION OF MBARI IS PROHIBITED

MANIPULATOR TOP - assembly

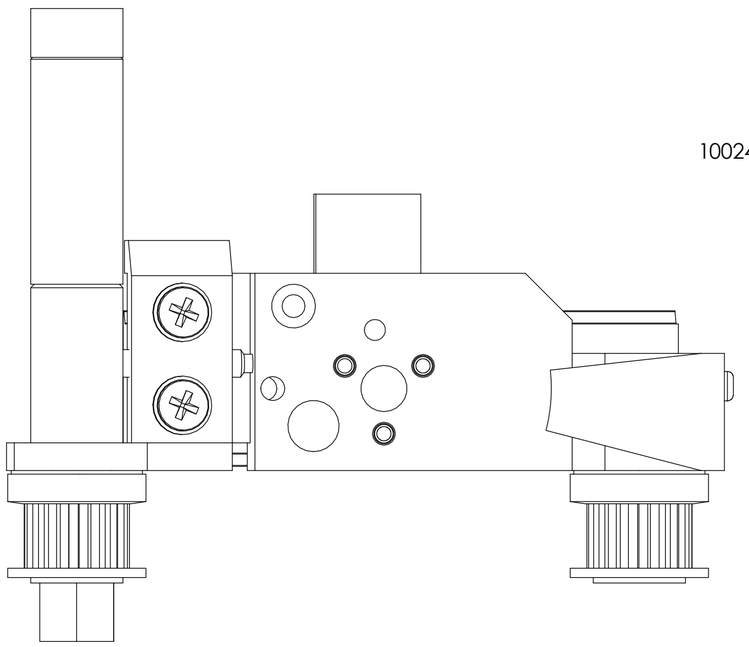

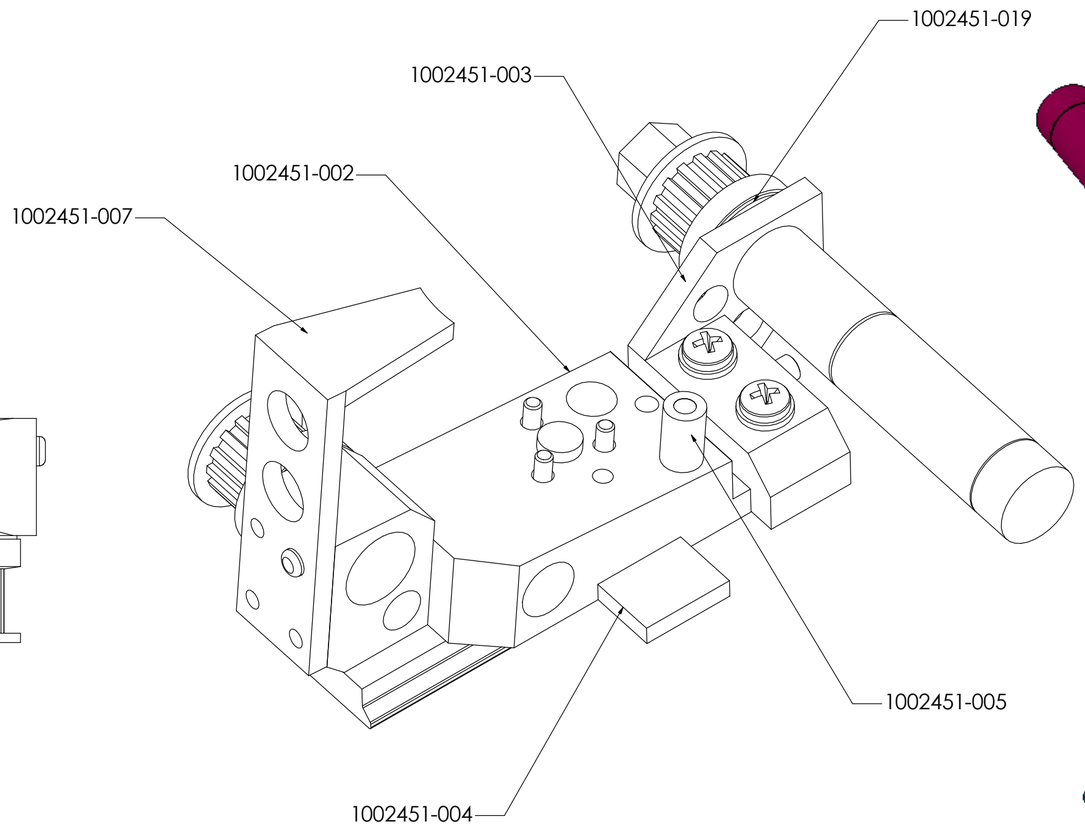

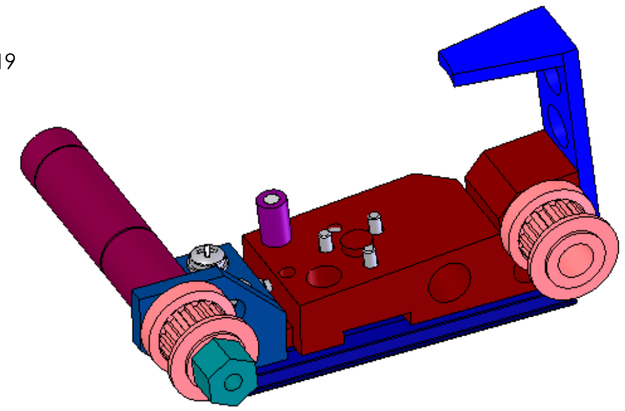

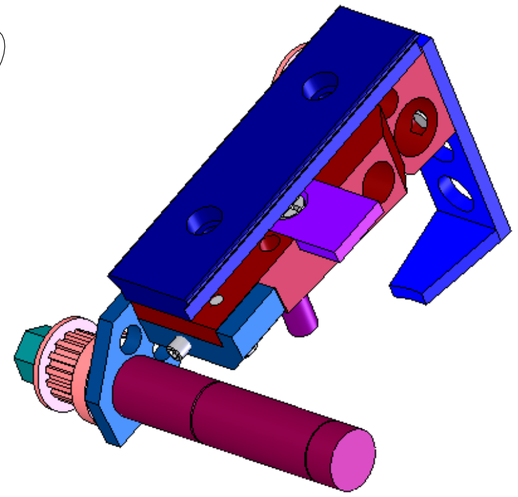

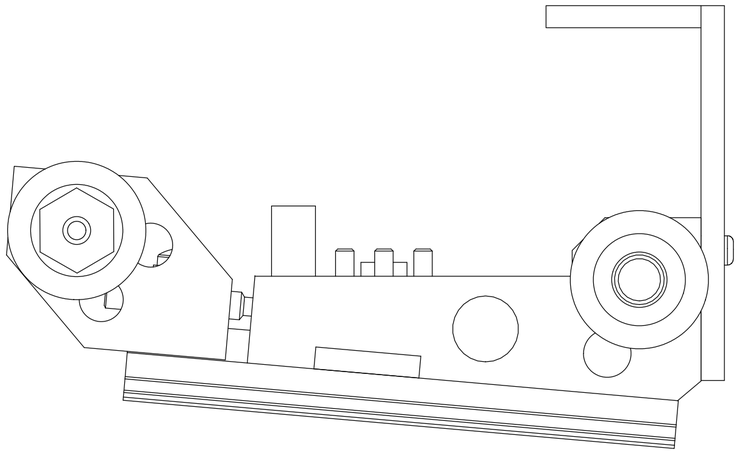

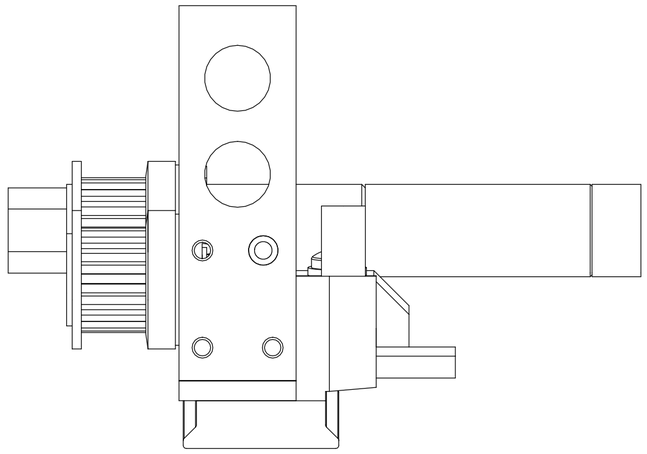

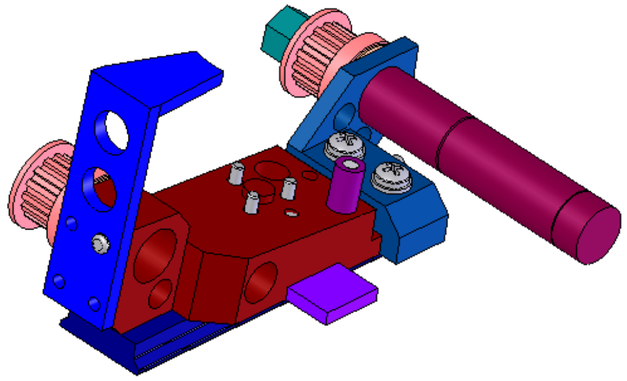

BILL OF MATERIALS

last updated on: Wednesday, April 19, 2006 2:33:02 PM

Shop / Q.C.	
Inspector	
Shop Foreman	
Engineer	
NEXT ASSY Description	NEXT ASSY Number
DO NOT SCALE DRAWING	

UNLESS OTHERWISE SPECIFIED TOLERANCES ARE:

2 PLACE DIM	3 PLACE DIM	4 PLACE DIM	ANGLES
±.01	±.005	±.0005	±1°

1. DIMENSIONS ARE IN INCHES
2. DIMENSION LIMITS HELD AFTER PLATING
3. REMOVE BURRS & SHARP EDGES .010 MAX
4. MACHINED FILLET RADII .000 TO .015
5. MACHINED DIAMETERS ON A COMMON CENTERLINE CONCENTRIC WITHIN .005
6. PERPENDICULARITY & PARALLELISM OF MACHINED SURFACES .001 PER INCH, MAX .003 INCHES FOR SINGLE SURFACE.
7. SURFACE FINISH TO BE 32 MICRON UNLESS OTHERWISE SPECIFIED

APPROVALS DATE

ENGINEER
Jason Feldman
831-775-1837

CHECKED

PROJECT NUMBER
701312.00

PROJECT
ESP 2G

Monterey Bay Aquarium Research Institute
M B A R I
7700 Sandholdt Road
Moss Landing, CA
95039

manipulator

SIZE	DWG. NO.	REV.
C	1002451	D

CAD FILE: X:\701312 ESP 2G\SolidWorks files\internal structure (1002209)

SHEET 4 OF 19

THE INFORMATION CONTAINED IN THIS DRAWING IS THE SOLE PROPERTY OF MBARI ANY REPRODUCTION IN PART OR WHOLE WITHOUT THE WRITTEN PERMISSION OF MBARI IS PROHIBITED

1002451-002
MANIPULATOR TOP

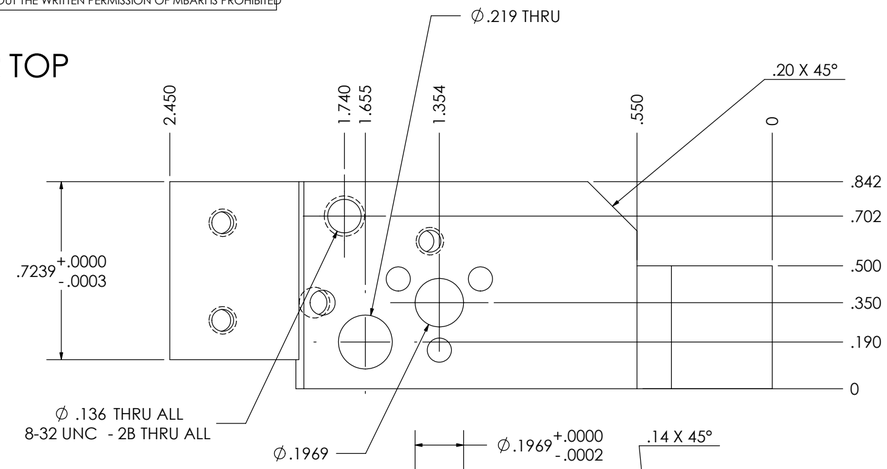

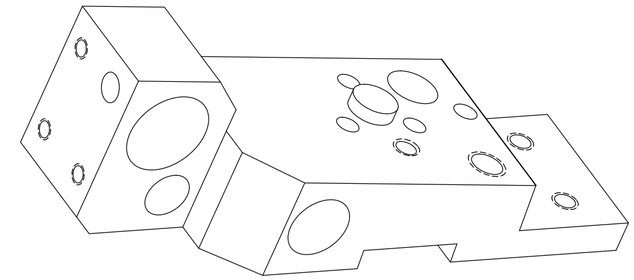

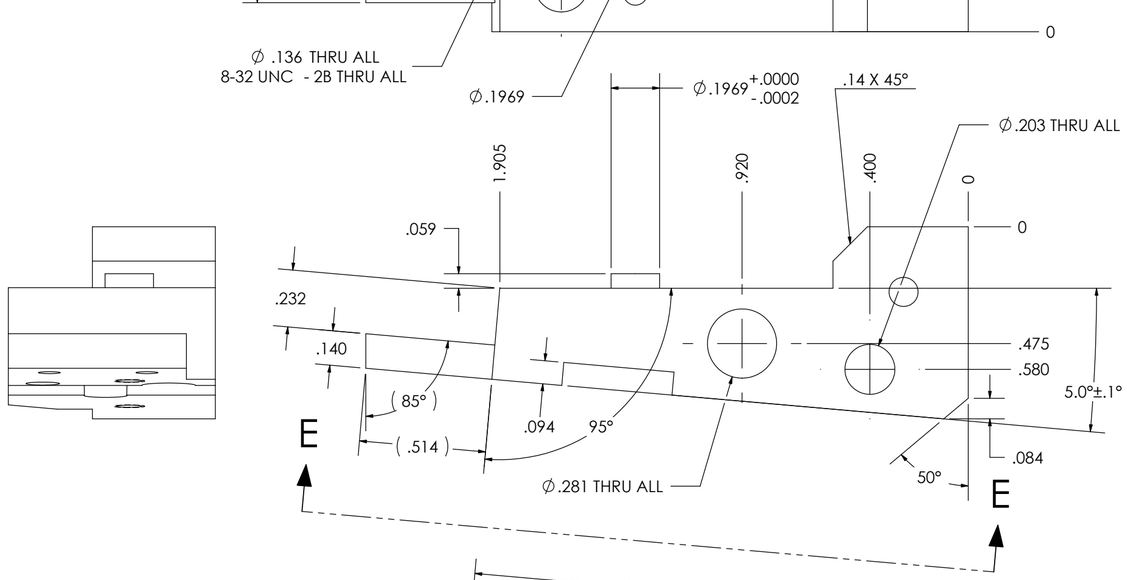

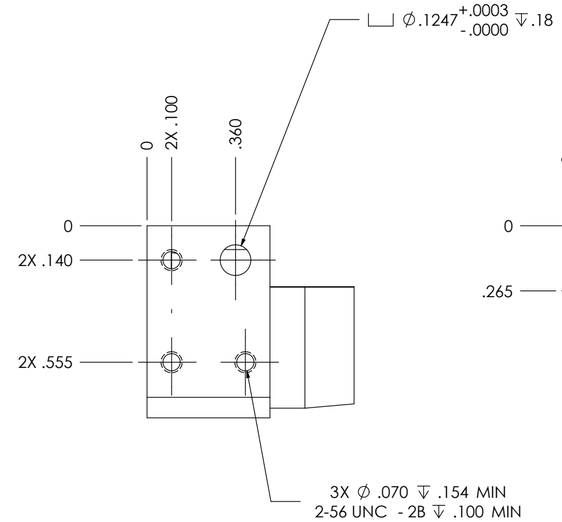

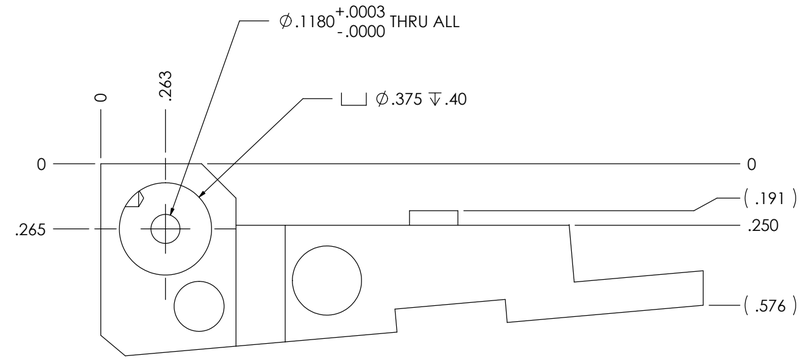

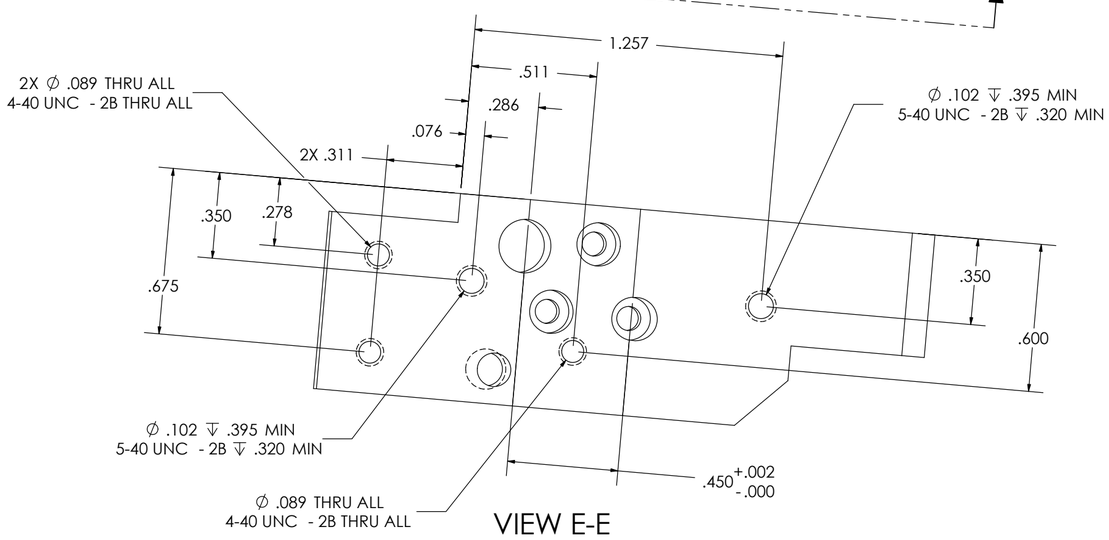

VIEW E-E

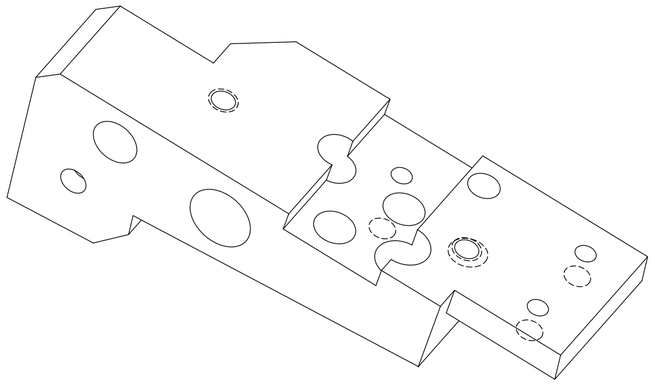

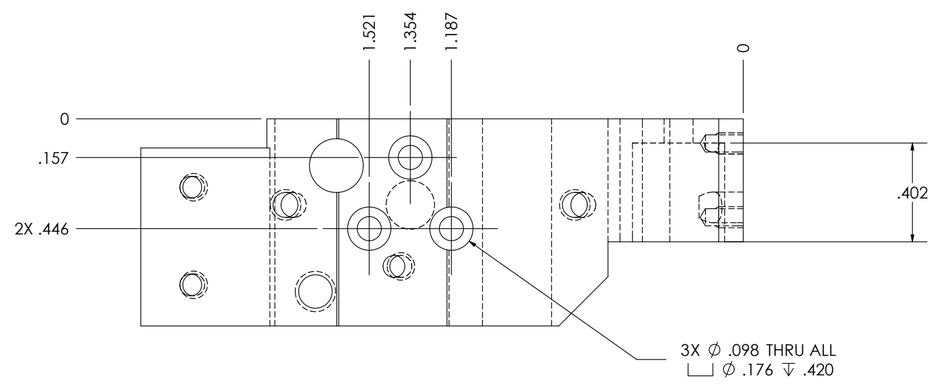

ITEM NO.	PART NUMBER	DESCRIPTION	MATERIAL	QTY.
2	1002451-002	manipulator top	7075-T6 or -T651 Aluminum	1

BILL OF MATERIALS

last updated on: Wednesday, April 19, 2006 2:33:02 PM

Shop / Q.C.
Inspector
Shop Foreman
Engineer
NEXT ASSY Description | NEXT ASSY Number
DO NOT SCALE DRAWING

UNLESS OTHERWISE SPECIFIED TOLERANCES ARE:

2 PLACE DIM	3 PLACE DIM	4 PLACE DIM	ANGLES
±.01	±.005	±.0005	±1°

1. DIMENSIONS ARE IN INCHES
2. DIMENSION LIMITS HELD AFTER PLATING
3. REMOVE BURRS & SHARP EDGES .010 MAX
4. MACHINED FILLET RADII .000 TO .015
5. MACHINED DIAMETERS ON A COMMON CENTERLINE CONCENTRIC WITHIN .OO5
6. PERPENDICULARITY & PARALLELISM OF MACHINED SURFACES .001 PER INCH. MAX .003 INCHES FOR SINGLE SURFACE.
7. SURFACE FINISH TO BE 32 MICRON UNLESS OTHERWISE SPECIFIED

APPROVALS DATE
ENGINEER Jason Feldman 831-775-1837
CHECKED
PROJECT NUMBER 701312.00
PROJECT ESP 2G

Monterey Bay Aquarium Research Institute
M B A R I
7700 Sandholdt Road
Moss Landing, CA
95039

manipulator

SIZE C | DWG. NO. 1002451 | REV. D

CAD FILE: X:\701312 ESP 2G\SolidWorks files\internal structure (1002209)

SHEET 5 OF 19

THE INFORMATION CONTAINED IN THIS DRAWING IS THE SOLE PROPERTY OF MBARI ANY REPRODUCTION IN PART OR WHOLE WITHOUT THE WRITTEN PERMISSION OF MBARI IS PROHIBITED

1002451-003
MANIPULATOR BELT TENSIONER

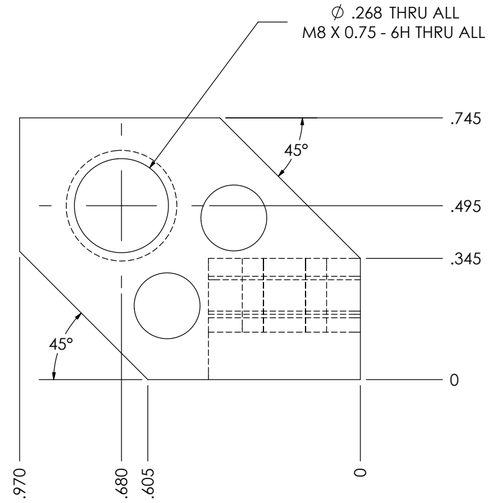

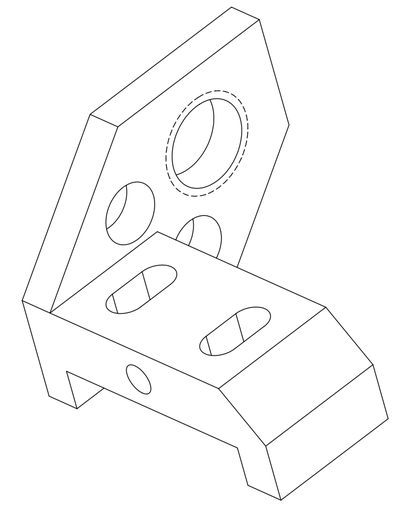

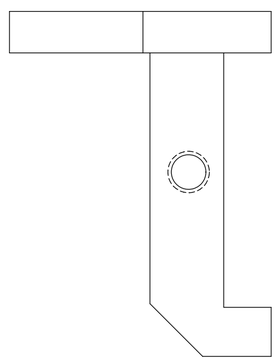

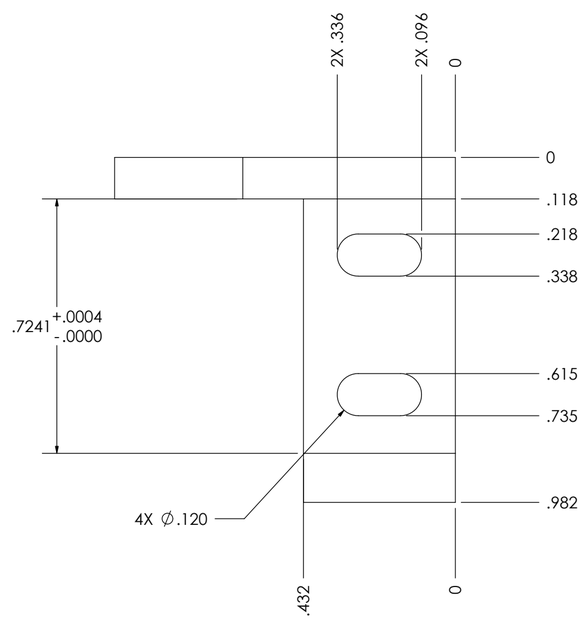

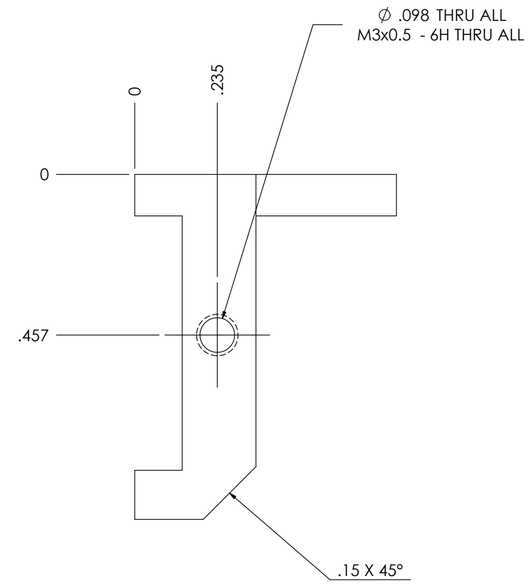

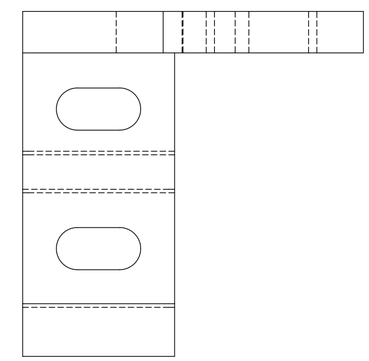

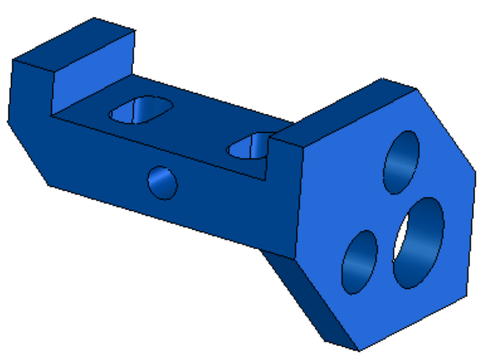

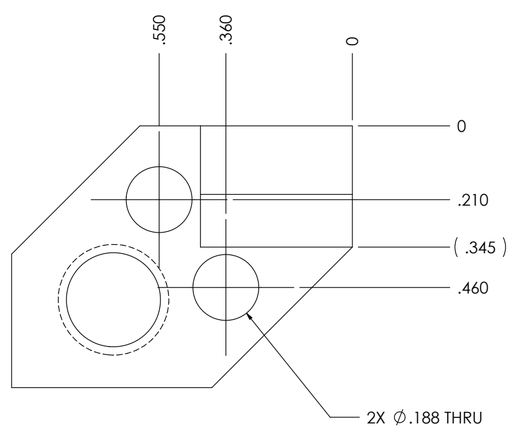

ITEM NO.	PART NUMBER	DESCRIPTION	MATERIAL	QTY.
3	1002451-003	manipulator belt tensioner	7075-T6 or -T651 Aluminum	1

BILL OF MATERIALS

last updated on: Wednesday, April 19, 2006 2:33:02 PM

Shop / Q.C.
Inspector
Shop Foreman
Engineer
NEXT ASSY Description | NEXT ASSY Number
DO NOT SCALE DRAWING

UNLESS OTHERWISE SPECIFIED TOLERANCES ARE:

2 PLACE DIM	3 PLACE DIM	4 PLACE DIM	ANGLES
±.01	±.005	±.0005	±1°

1. DIMENSIONS ARE IN INCHES
2. DIMENSION LIMITS HELD AFTER PLATING
3. REMOVE BURRS & SHARP EDGES .010 MAX
4. MACHINED FILLET RADII .000 TO .015
5. MACHINED DIAMETERS ON A COMMON CENTERLINE CONCENTRIC WITHIN .OO5
6. PERPENDICULARITY & PARALLELISM OF MACHINED SURFACES .001 PER INCH. MAX .003 INCHES FOR SINGLE SURFACE.
7. SURFACE FINISH TO BE 32 MICRON UNLESS OTHERWISE SPECIFIED

APPROVALS DATE
ENGINEER Jason Feldman 831-775-1837
CHECKED
PROJECT NUMBER 701312.00
PROJECT ESP 2G

Monterey Bay Aquarium Research Institute
M B A R I
7700 Sandholdt Road
Moss Landing, CA
95039

manipulator

SIZE C | DWG. NO. 1002451 | REV. D

CAD FILE: X:\701312 ESP 2G\SolidWorks files\internal structure (1002209)

SHEET 6 OF 19

THE INFORMATION CONTAINED IN THIS DRAWING IS THE SOLE PROPERTY OF MBARI ANY REPRODUCTION IN PART OR WHOLE WITHOUT THE WRITTEN PERMISSION OF MBARI IS PROHIBITED

1002451-004
MANIPULATOR SLIDE HALL FLAG

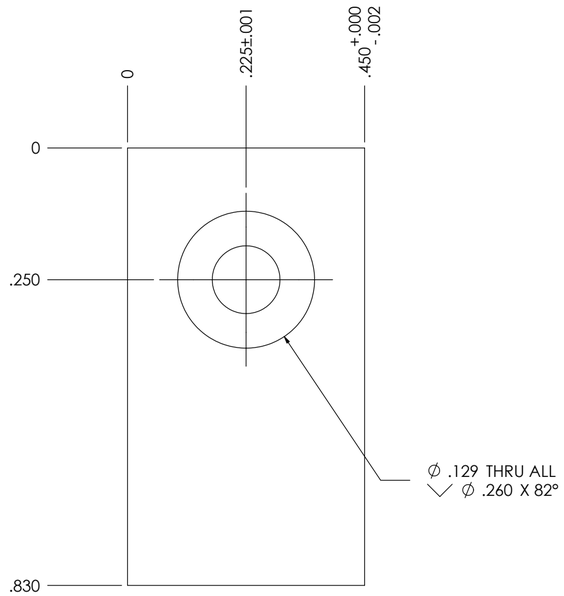

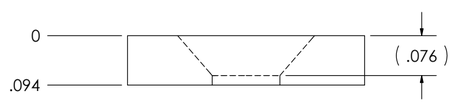

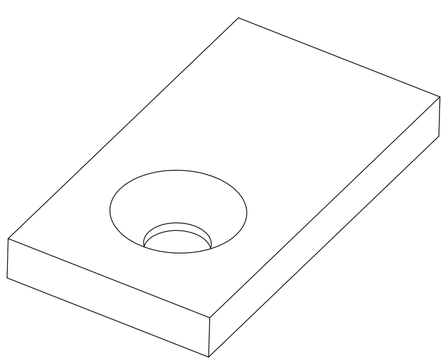

Brecoflex T2.5X6-15
(modification)

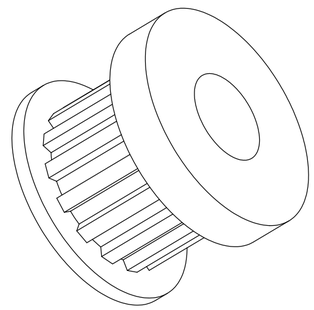

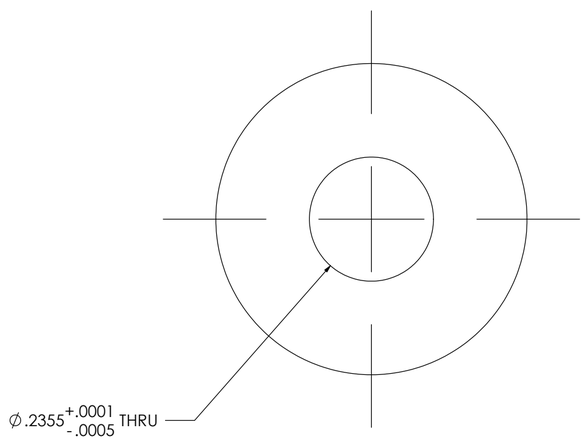

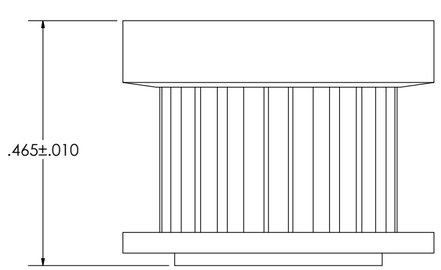

1002451-006
MANIPULATOR BORE REDUCER

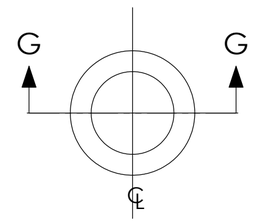

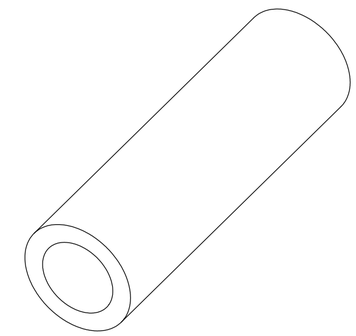

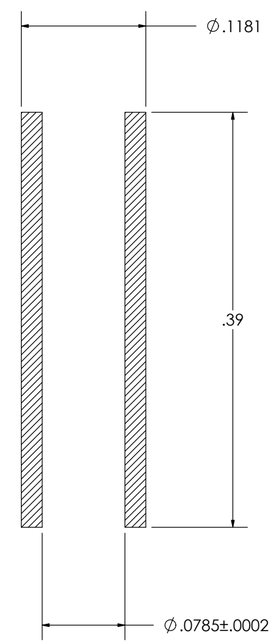

SECTION G-G
SCALE 9 : 1

ITEM NO.	PART NUMBER	DESCRIPTION	MATERIAL	QTY.
4	1002451-004	manipulator slide flag	430-F Stainless steel	1
6	1002451-006	manipulator bore reducer	Brass	3

BILL OF MATERIALS

last updated on: Wednesday, April 19, 2006 2:33:02 PM

Shop / Q.C.
Inspector
Shop Foreman
Engineer
NEXT ASSY Description | NEXT ASSY Number
DO NOT SCALE DRAWING

UNLESS OTHERWISE SPECIFIED TOLERANCES ARE:

2 PLACE DIM	3 PLACE DIM	4 PLACE DIM	ANGLES
±.01	±.005	±.0005	±1°

1. DIMENSIONS ARE IN INCHES
2. DIMENSION LIMITS HELD AFTER PLATING
3. REMOVE BURRS & SHARP EDGES .010 MAX
4. MACHINED FILLET RADII .000 TO .015
5. MACHINED DIAMETERS ON A COMMON CENTERLINE CONCENTRIC WITHIN .OO5
6. PERPENDICULARITY & PARALLELISM OF MACHINED SURFACES .001 PER INCH. MAX .003 INCHES FOR SINGLE SURFACE.
7. SURFACE FINISH TO BE 32 MICRON UNLESS OTHERWISE SPECIFIED

APPROVALS | DATE
ENGINEER
Jason Feldman
831-775-1837
CHECKED
PROJECT NUMBER
701312.00
PROJECT
ESP 2G

Monterey Bay Aquarium Research Institute
M B A R I
7700 Sandholdt Road
Moss Landing, CA
95039

manipulator

SIZE C | DWG. NO. 1002451 | REV. D

CAD FILE: X:\701312 ESP 2G\SolidWorks files\internal structure (1002209)

SHEET 7 OF 19

THE INFORMATION CONTAINED IN THIS DRAWING IS THE SOLE PROPERTY OF MBARI ANY REPRODUCTION IN PART OR WHOLE WITHOUT THE WRITTEN PERMISSION OF MBARI IS PROHIBITED

1002451-007
MANIPULATOR MAIN HALL FLAG

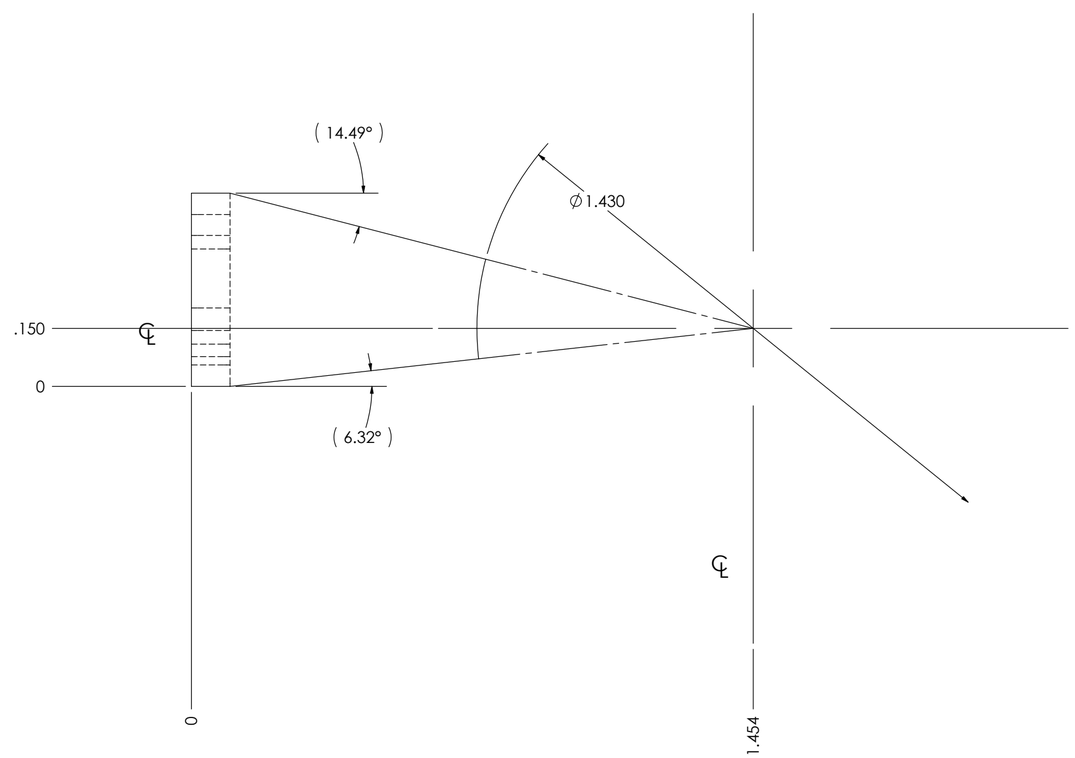

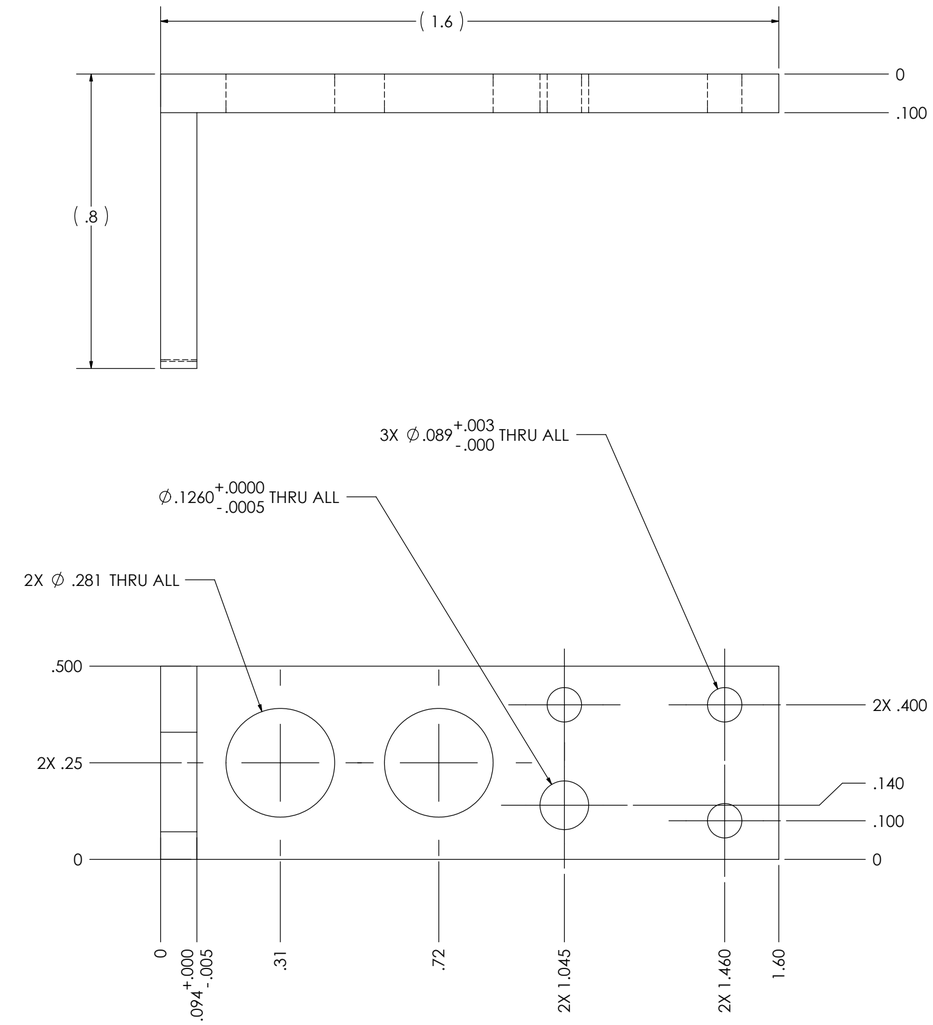

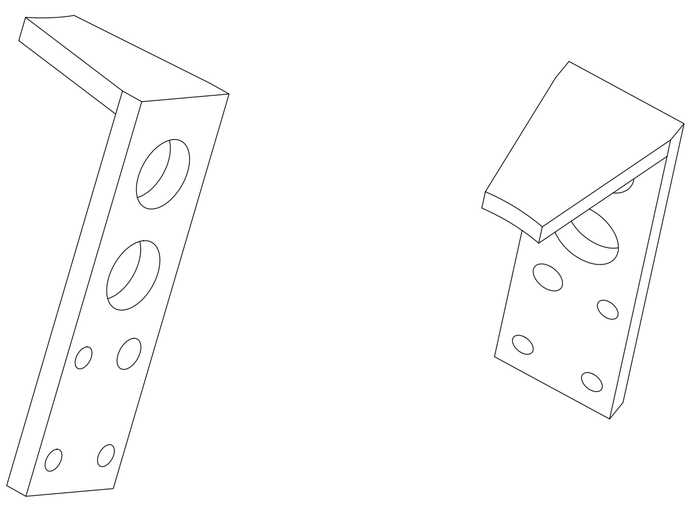

ITEM NO.	PART NUMBER	DESCRIPTION	MATERIAL	QTY.
7	1002451-007	manipulator main hall flag	430-F Stainless Steel	1

BILL OF MATERIALS

last updated on: Wednesday, April 19, 2006 2:33:02 PM

Shop / Q.C.

Inspector	
Shop Foreman	
Engineer	
NEXT ASSY Description	NEXT ASSY Number

DO NOT SCALE DRAWING

UNLESS OTHERWISE SPECIFIED TOLERANCES ARE:

2 PLACE DIM	3 PLACE DIM	4 PLACE DIM	ANGLES
±.01	±.005	±.0005	±1°

1. DIMENSIONS ARE IN INCHES
2. DIMENSION LIMITS HELD AFTER PLATING
3. REMOVE BURRS & SHARP EDGES .010 MAX
4. MACHINED FILLET RADII .000 TO .015
5. MACHINED DIAMETERS ON A COMMON CENTERLINE CONCENTRIC WITHIN .OO5
6. PERPENDICULARITY & PARALLELISM OF MACHINED SURFACES .001 PER INCH, MAX .003 INCHES FOR SINGLE SURFACE.
7. SURFACE FINISH TO BE 32 MICRON UNLESS OTHERWISE SPECIFIED

APPROVALS DATE

ENGINEER
Jason Feldman
831-775-1837

CHECKED

PROJECT NUMBER
701312.00

PROJECT
ESP 2G

Monterey Bay Aquarium Research Institute
M B A R I
7700 Sandholdt Road
Moss Landing, CA
95039

manipulator

SIZE C | DWG. NO. 1002451 | REV. D

CAD FILE: X:\701312 ESP 2G\SolidWorks files\internal structure (1002209)

THE INFORMATION CONTAINED IN THIS DRAWING IS THE SOLE PROPERTY OF MBARI ANY REPRODUCTION IN PART OR WHOLE WITHOUT THE WRITTEN PERMISSION OF MBARI IS PROHIBITED

MANIPULATOR BOTTOM - assembly

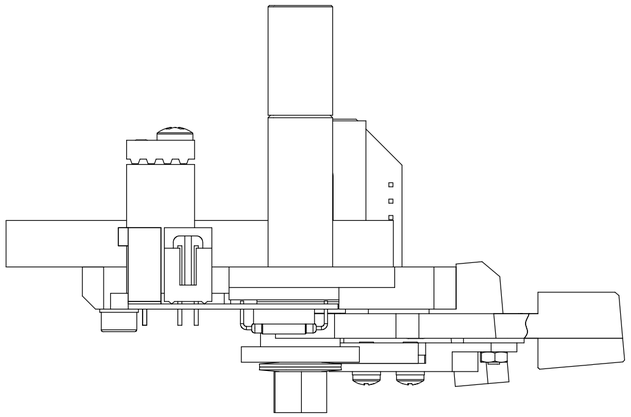

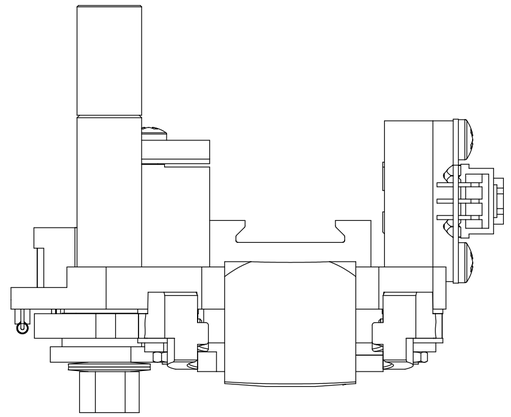

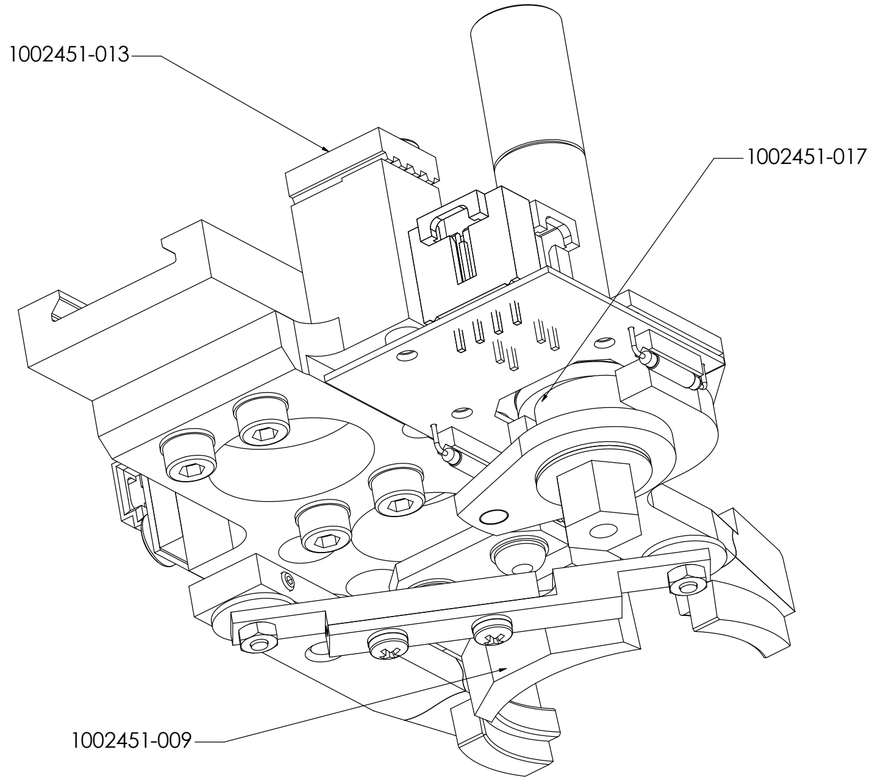

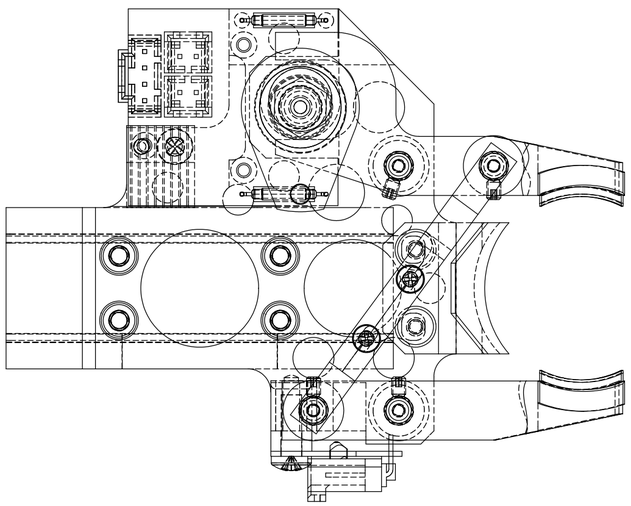

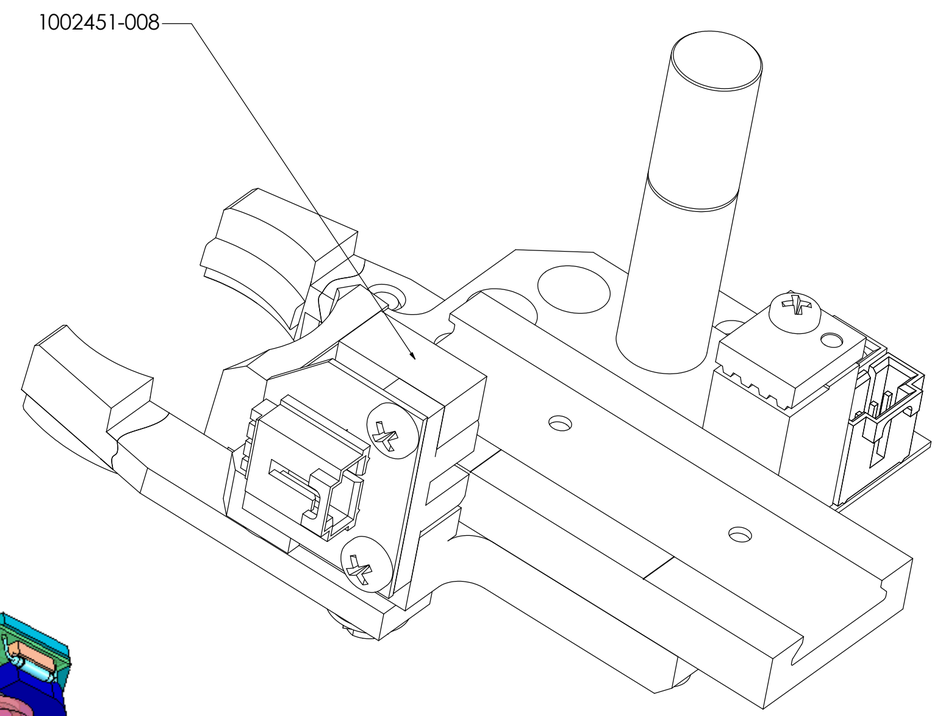

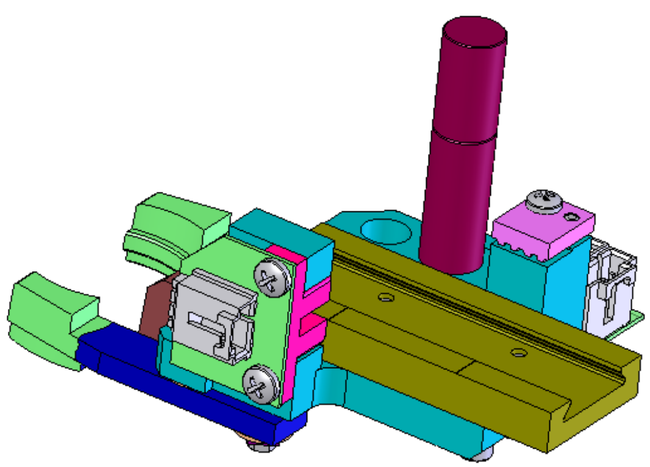

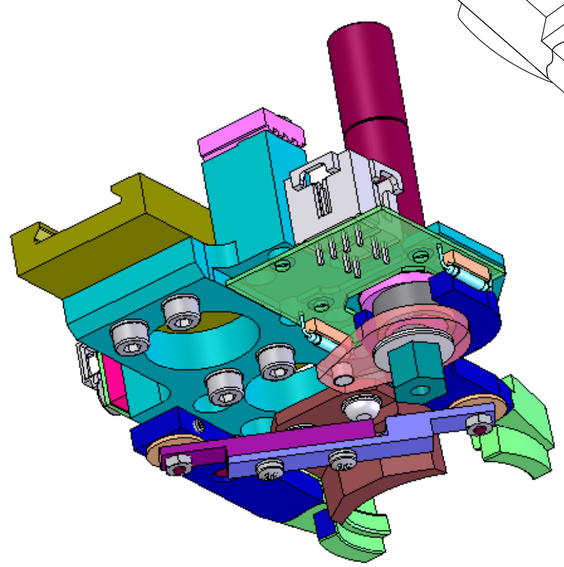

BILL OF MATERIALS

last updated on: Wednesday, April 19, 2006 2:33:02 PM

Shop / Q.C.	
Inspector	
Shop Foreman	
Engineer	
NEXT ASSY Description	NEXT ASSY Number
DO NOT SCALE DRAWING	

UNLESS OTHERWISE SPECIFIED TOLERANCES ARE:

2 PLACE DIM	3 PLACE DIM	4 PLACE DIM	ANGLES
±.01	±.005	±.0005	±1°

1. DIMENSIONS ARE IN INCHES
2. DIMENSION LIMITS HELD AFTER PLATING
3. REMOVE BURRS & SHARP EDGES .010 MAX
4. MACHINED FILLET RADII .000 TO .015
5. MACHINED DIAMETERS ON A COMMON CENTERLINE CONCENTRIC WITHIN .OO5
6. PERPENDICULARITY & PARALLELISM OF MACHINED SURFACES .001 PER INCH. MAX .003 INCHES FOR SINGLE SURFACE.
7. SURFACE FINISH TO BE 32 MICRON UNLESS OTHERWISE SPECIFIED

APPROVALS DATE

ENGINEER
Jason Feldman
831-775-1837

CHECKED

PROJECT NUMBER 701312.00

PROJECT ESP 2G

Monterey Bay Aquarium Research Institute
M B A R I
7700 Sandholdt Road
Moss Landing, CA
95039

manipulator

SIZE	DWG. NO.	REV.
C	1002451	D

CAD FILE: X:\701312 ESP 2G\SolidWorks files\internal structure (1002209)

SHEET 9 OF 19

THE INFORMATION CONTAINED IN THIS DRAWING IS THE SOLE PROPERTY OF MBARI ANY REPRODUCTION IN PART OR WHOLE WITHOUT THE WRITTEN PERMISSION OF MBARI IS PROHIBITED

1002451-008
MANIPULATOR BOTTOM

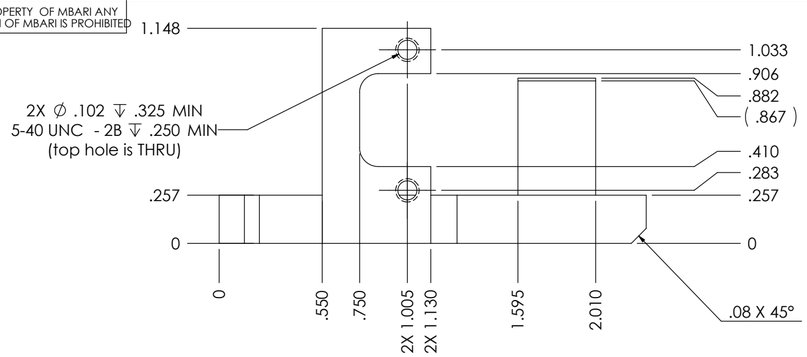

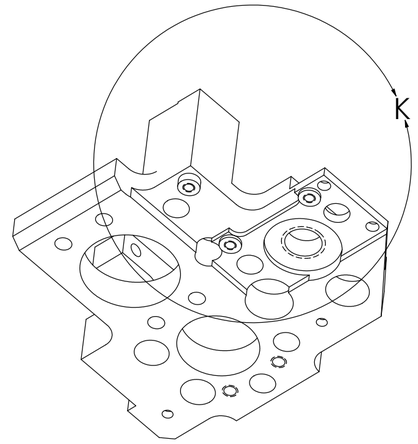

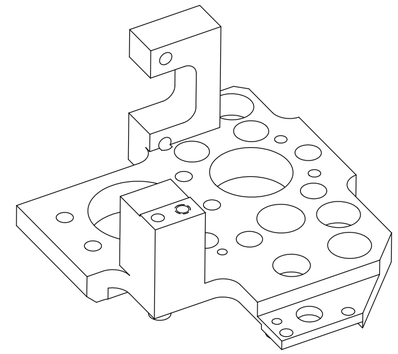

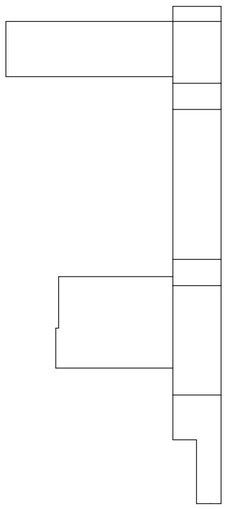

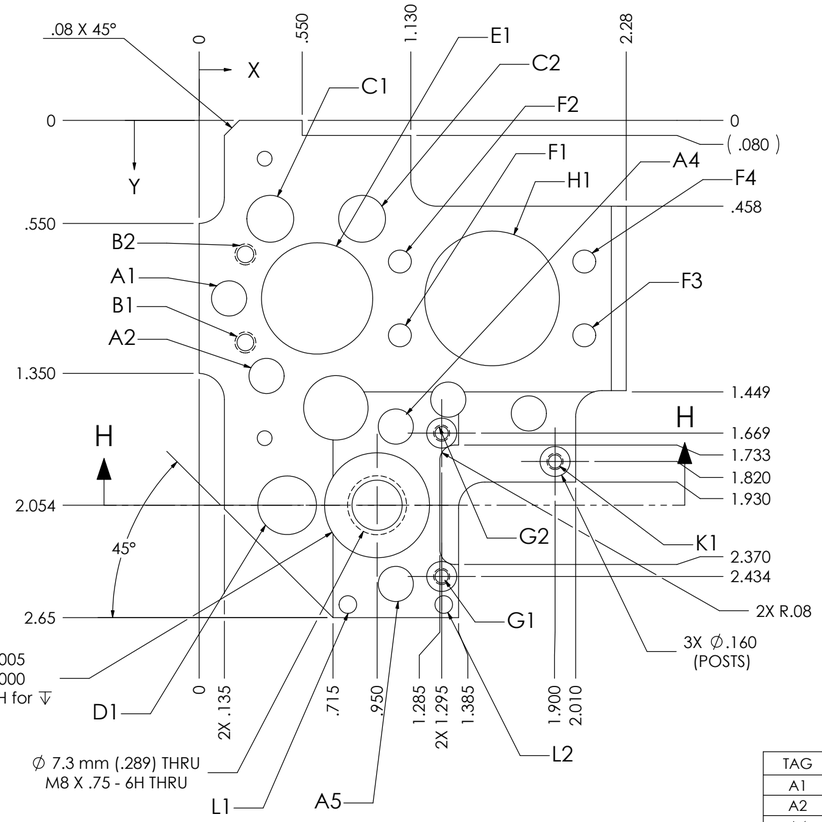

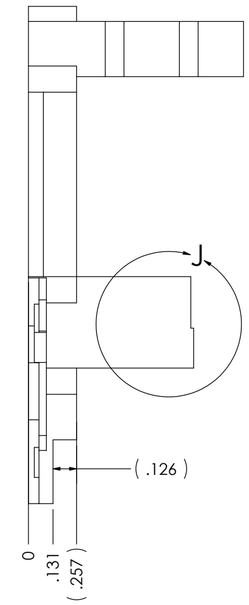

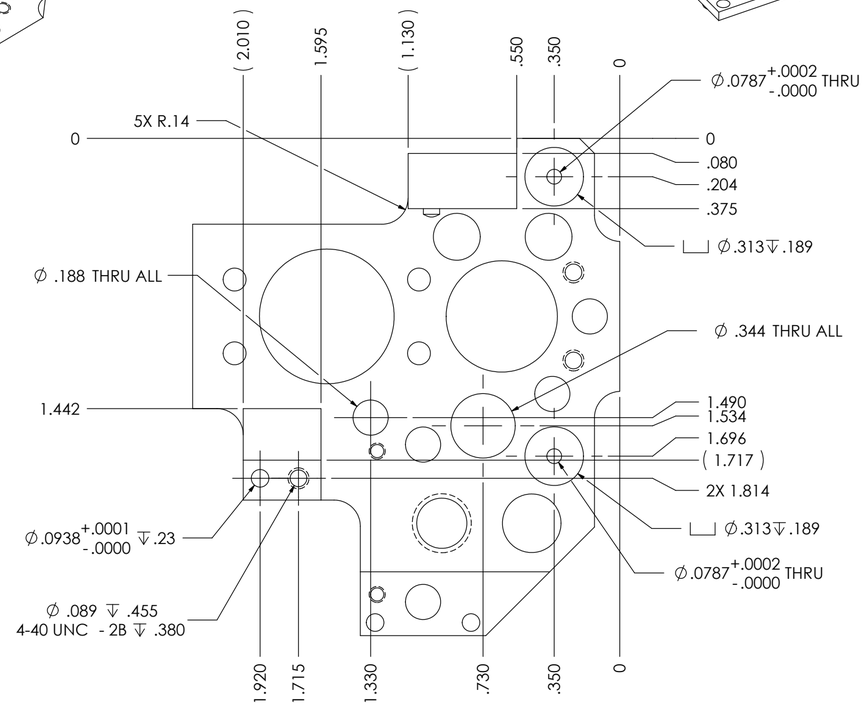

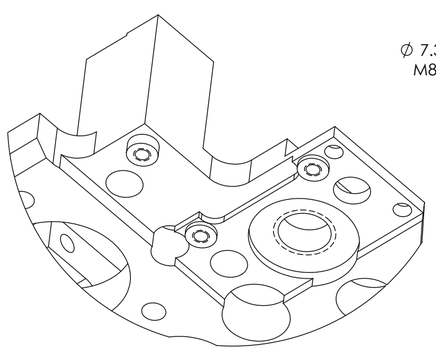

DETAIL K

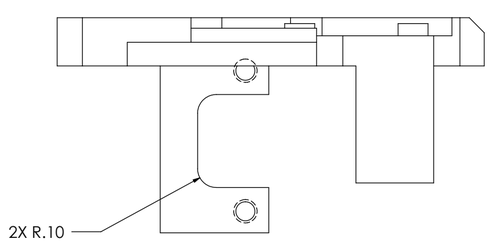

TAG	X LOC	Y LOC	SIZE
A1	.160	.950	∅ .188 THRU ALL
A2	.360	1.364	
A4	1.050	1.634	
A5	1.050	2.474	
B1	.247	1.185	∅ .089 THRU ALL 4-40 UNC - 2B THRU ALL
B2	.247	.715	
C1	.380	.525	∅ .250 THRU ALL
C2	.870	.525	
D1	.470	2.054	∅ .313 THRU ALL
E1	.630	.950	∅ .594 THRU ALL
F1	1.072	1.147	∅ .122 THRU ALL
F2	1.072	.753	
F3	2.056	1.147	
F4	2.056	.753	
G1	1.295	2.434	∅ .070 THRU ALL 2-56 UNC - 2B THRU ALL
G2	1.295	1.669	
H1	1.564	.950	∅ .719 THRU ALL
K1	1.900	1.820	∅ .070 ↧ .334 2-56 UNC - 2B ↧ .280
L1	.794	2.584	∅.094 THRU
L2	1.306	2.584	

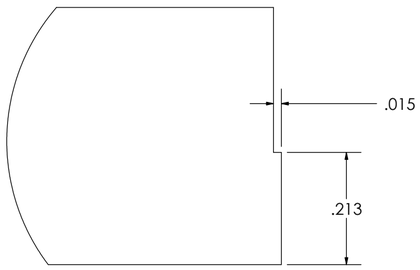

DETAIL J

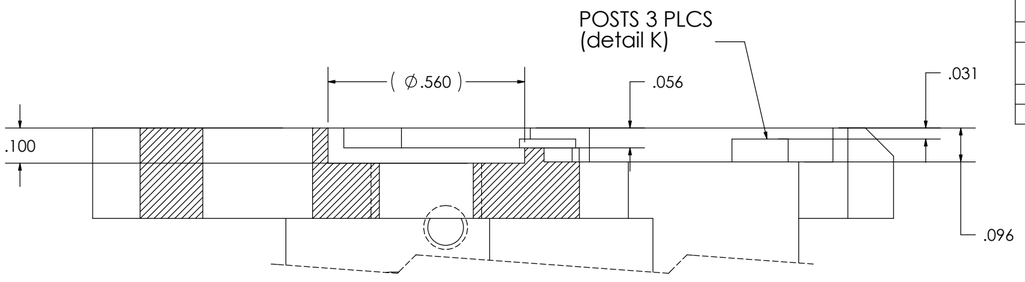

SECTION H-H

ITEM NO.	PART NUMBER	DESCRIPTION	MATERIAL	QTY.
8	1002451-008	manipulator bottom	Aluminum 7075-T6	1

BILL OF MATERIALS

last updated on: Wednesday, April 19, 2006 2:33:02 PM

Shop / Q.C.
Inspector
Shop Foreman
Engineer
NEXT ASSY Description | NEXT ASSY Number
DO NOT SCALE DRAWING

UNLESS OTHERWISE SPECIFIED TOLERANCES ARE:

2 PLACE DIM	3 PLACE DIM	4 PLACE DIM	ANGLES
±.01	±.005	±.0005	±1°

1. DIMENSIONS ARE IN INCHES
2. DIMENSION LIMITS HELD AFTER PLATING
3. REMOVE BURRS & SHARP EDGES .010 MAX
4. MACHINED FILLET RADII .000 TO .015
5. MACHINED DIAMETERS ON A COMMON CENTERLINE CONCENTRIC WITHIN .005
6. PERPENDICULARITY & PARALLELISM OF MACHINED SURFACES .001 PER INCH. MAX .003 INCHES FOR SINGLE SURFACE.
7. SURFACE FINISH TO BE 32 MICRON UNLESS OTHERWISE SPECIFIED

APPROVALS DATE
ENGINEER Jason Feldman 831-775-1837
CHECKED
PROJECT NUMBER 701312.00
PROJECT ESP 2G

Monterey Bay Aquarium Research Institute
M B A R I
7700 Sandholdt Road
Moss Landing, CA
95039

manipulator

SIZE C | DWG. NO. 1002451 | REV. D

CAD FILE: X:\701312 ESP 2G\SolidWorks files\internal structure (1002209)

THE INFORMATION CONTAINED IN THIS DRAWING IS THE SOLE PROPERTY OF MBARI ANY REPRODUCTION IN PART OR WHOLE WITHOUT THE WRITTEN PERMISSION OF MBARI IS PROHIBITED

1002451-009
MANIPULATOR PUCK RETAINER

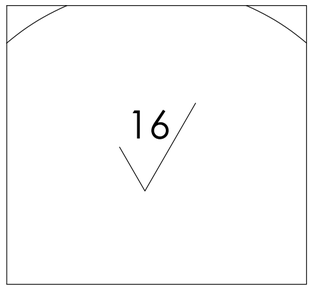

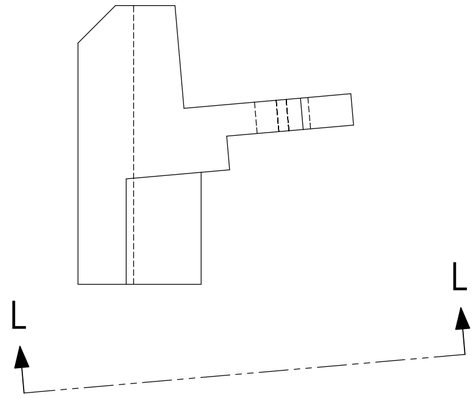

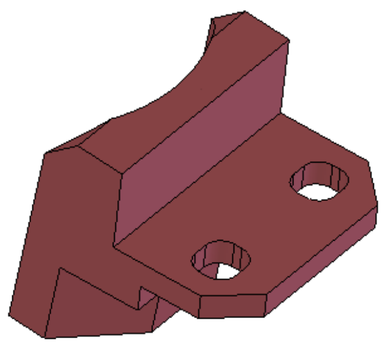

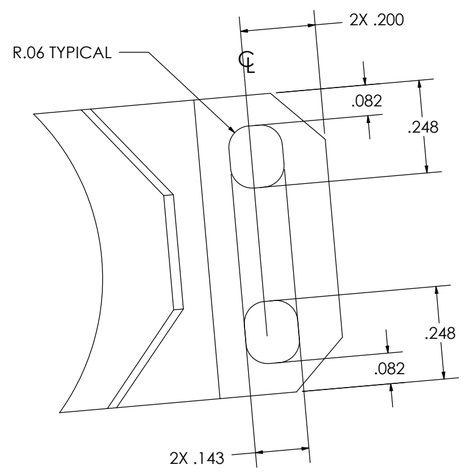

VIEW L-L

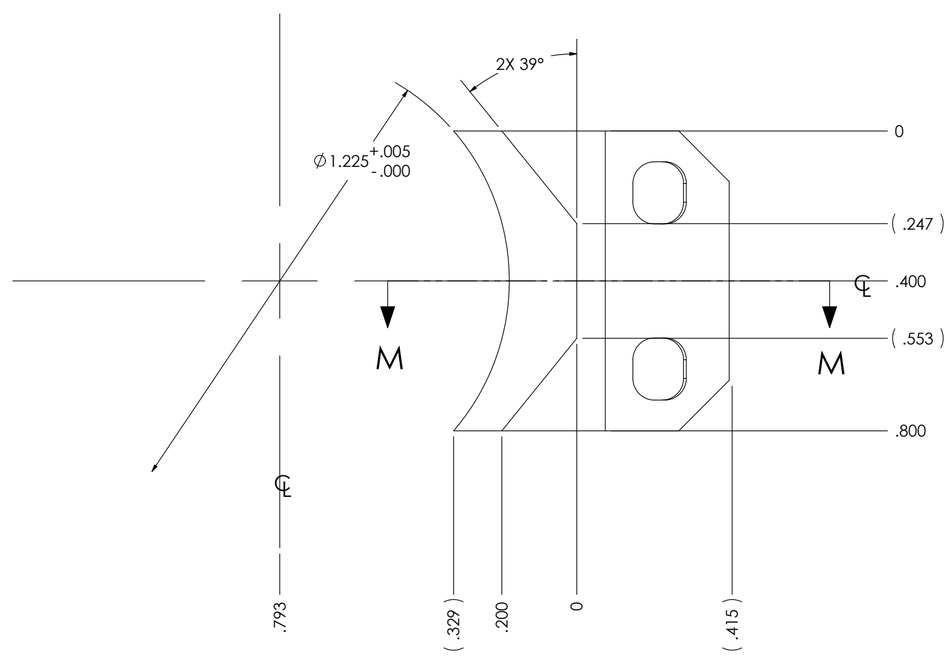

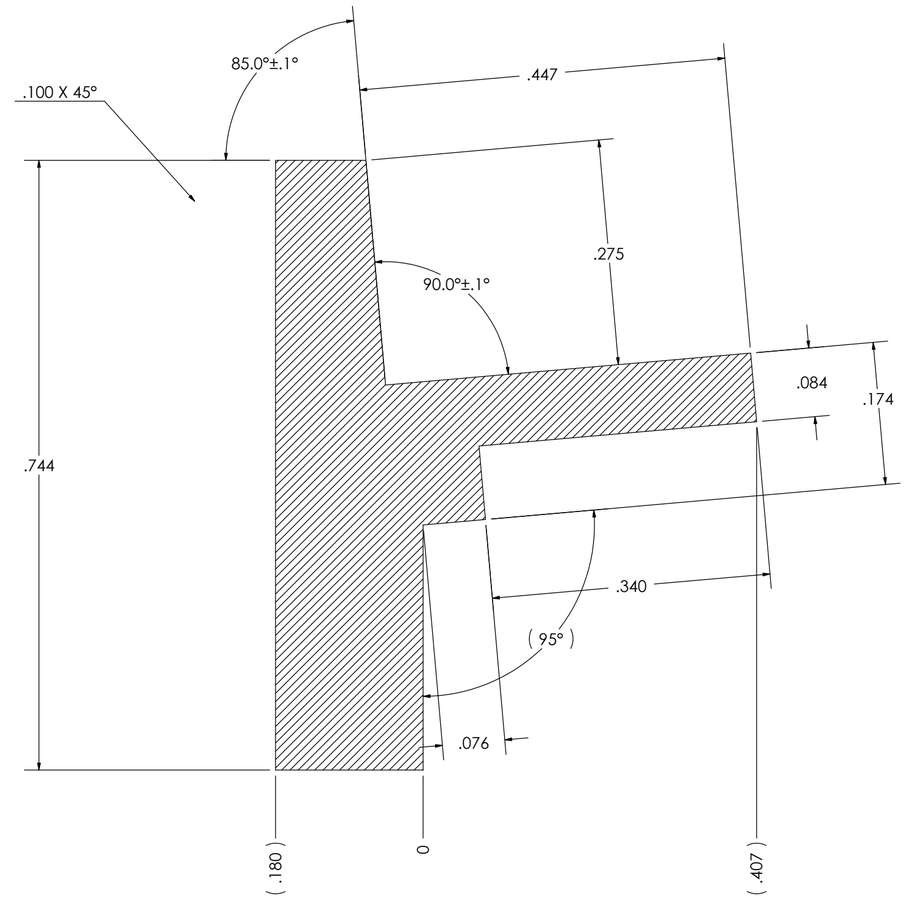

SECTION M-M
SCALE 7 : 1

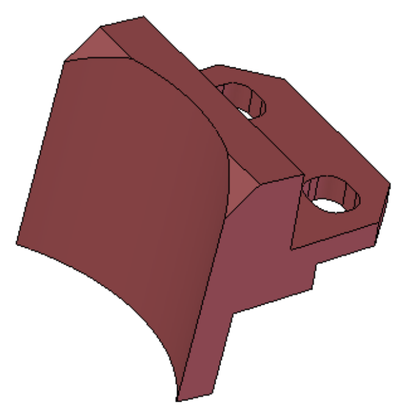

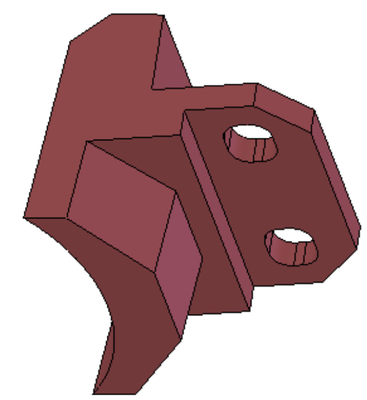

ITEM NO.	PART NUMBER	DESCRIPTION	MATERIAL	QTY.
9	1002451-009	manipulator puck retainer	Delrin AF (Teflon filled)	2

BILL OF MATERIALS

last updated on: Wednesday, April 19, 2006 2:33:02 PM

Shop / Q.C.
Inspector
Shop Foreman
Engineer
NEXT ASSY Description | NEXT ASSY Number
DO NOT SCALE DRAWING

UNLESS OTHERWISE SPECIFIED TOLERANCES ARE:

2 PLACE DIM	3 PLACE DIM	4 PLACE DIM	ANGLES
±.01	±.005	±.0005	±1°

1. DIMENSIONS ARE IN INCHES
2. DIMENSION LIMITS HELD AFTER PLATING
3. REMOVE BURRS & SHARP EDGES .010 MAX
4. MACHINED FILLET RADII .000 TO .015
5. MACHINED DIAMETERS ON A COMMON CENTERLINE CONCENTRIC WITHIN .005
6. PERPENDICULARITY & PARALLELISM OF MACHINED SURFACES .001 PER INCH, MAX .003 INCHES FOR SINGLE SURFACE.
7. SURFACE FINISH TO BE 32 MICRON UNLESS OTHERWISE SPECIFIED

APPROVALS DATE
ENGINEER Jason Feldman 831-775-1837
CHECKED
PROJECT NUMBER 701312.00
PROJECT ESP 2G

Monterey Bay Aquarium Research Institute
M B A R I
7700 Sandholdt Road
Moss Landing, CA
95039

manipulator

SIZE C | DWG. NO. 1002451 | REV. D

CAD FILE: X:\701312 ESP 2G\SolidWorks files\internal structure (1002209)

THE INFORMATION CONTAINED IN THIS DRAWING IS THE SOLE PROPERTY OF MBARI ANY REPRODUCTION IN PART OR WHOLE WITHOUT THE WRITTEN PERMISSION OF MBARI IS PROHIBITED

1002451-010
MANIPULATOR CAM

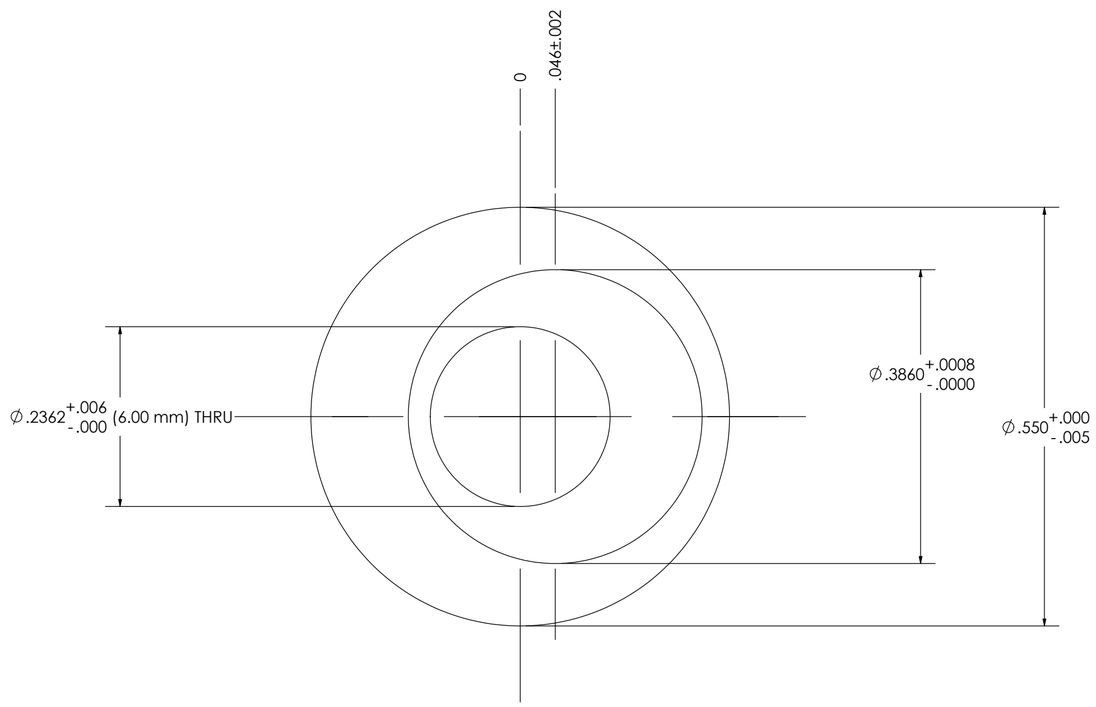

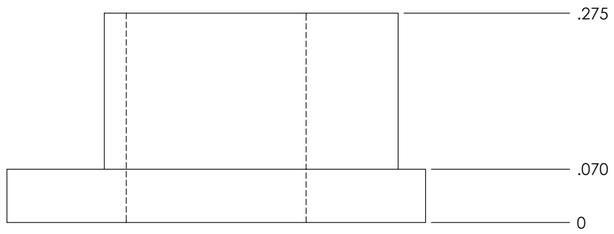

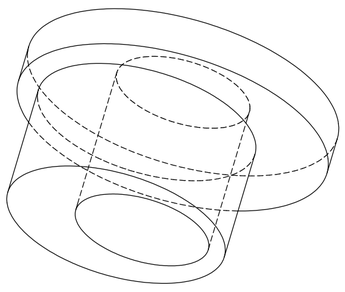

1002451-021
CAM TIRE

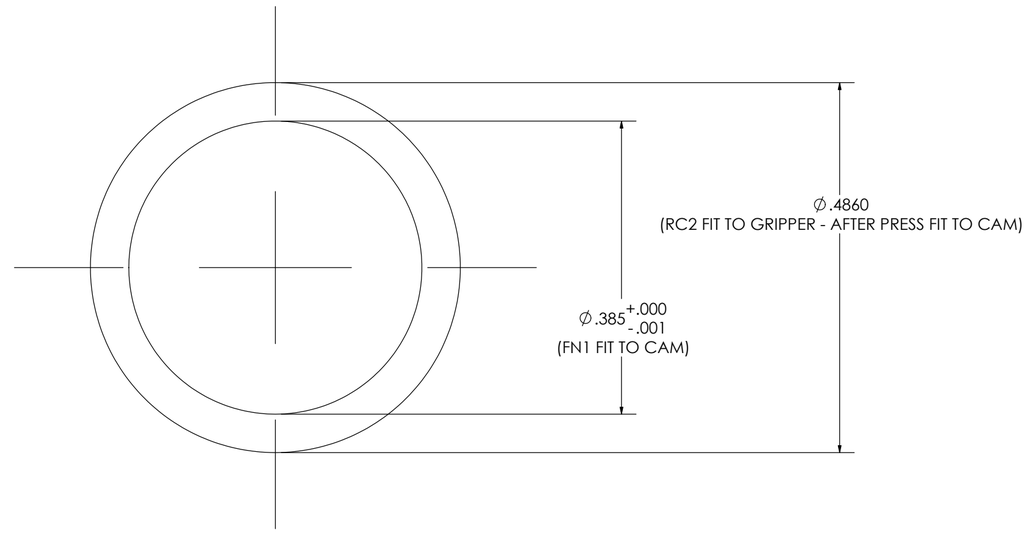

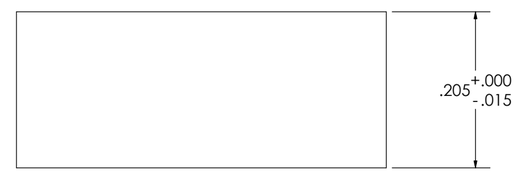

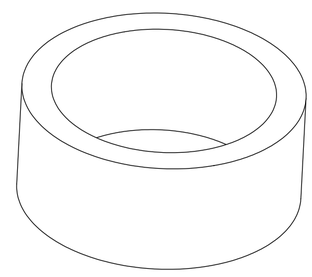

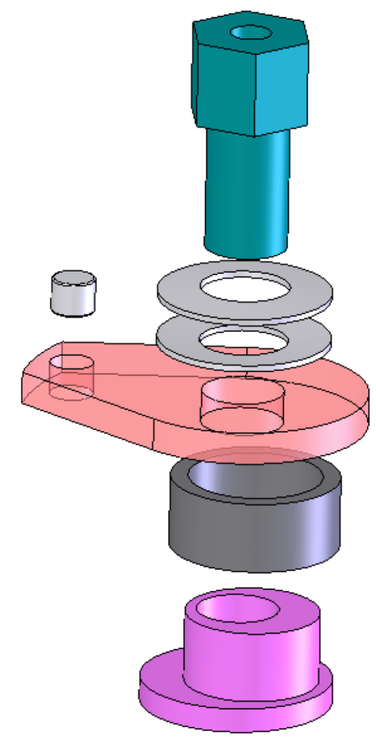

ITEM NO.	PART NUMBER	DESCRIPTION	MATERIAL	QTY.
10	1002451-010	manipulator CAM	Stainless Steel	1
21	1002451-021	CAM TIRE	Vespel SP-21	1

BILL OF MATERIALS

last updated on: Wednesday, April 19, 2006 2:33:02 PM

Shop / Q.C.
Inspector
Shop Foreman
Engineer
NEXT ASSY Description | NEXT ASSY Number

DO NOT SCALE DRAWING

UNLESS OTHERWISE SPECIFIED TOLERANCES ARE:

2 PLACE DIM	3 PLACE DIM	4 PLACE DIM	ANGLES
±.01	±.005	±.0005	±1°

1. DIMENSIONS ARE IN INCHES
2. DIMENSION LIMITS HELD AFTER PLATING
3. REMOVE BURRS & SHARP EDGES .010 MAX
4. MACHINED FILLET RADII .000 TO .015
5. MACHINED DIAMETERS ON A COMMON CENTERLINE CONCENTRIC WITHIN .005
6. PERPENDICULARITY & PARALLELISM OF MACHINED SURFACES .001 PER INCH, MAX .003 INCHES FOR SINGLE SURFACE.
7. SURFACE FINISH TO BE 32 MICRON UNLESS OTHERWISE SPECIFIED

APPROVALS DATE
ENGINEER Jason Feldman 831-775-1837
CHECKED

PROJECT NUMBER 701312.00
PROJECT ESP 2G

Monterey Bay Aquarium Research Institute
M B A R I
7700 Sandholdt Road
Moss Landing, CA
95039

manipulator

SIZE C | DWG. NO. 1002451 | REV. D

CAD FILE: X:\701312 ESP 2G\SolidWorks files\internal structure (1002209)

SHEET 12 OF 19

THE INFORMATION CONTAINED IN THIS DRAWING IS THE SOLE PROPERTY OF MBARI ANY REPRODUCTION IN PART OR WHOLE WITHOUT THE WRITTEN PERMISSION OF MBARI IS PROHIBITED

1002451-012
MANIPULATOR REED WHEEL

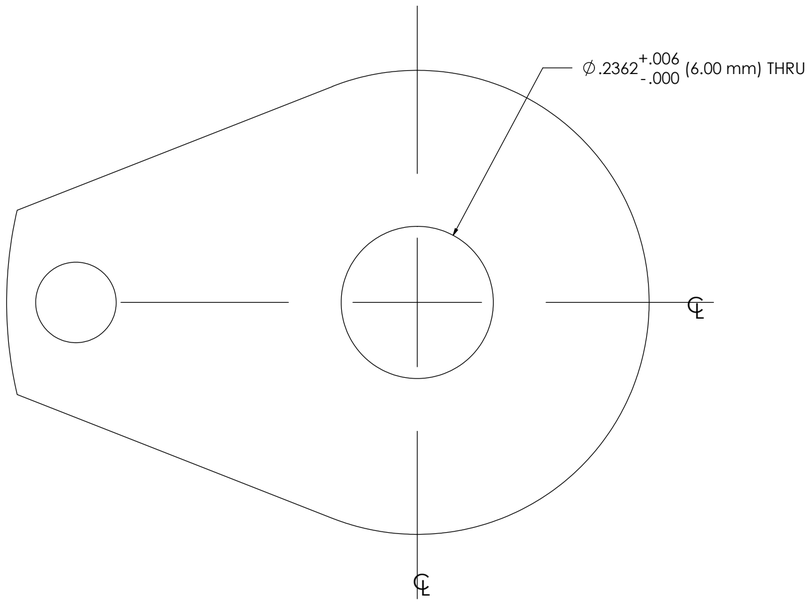

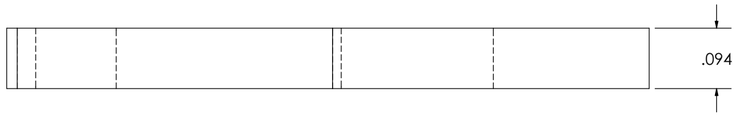

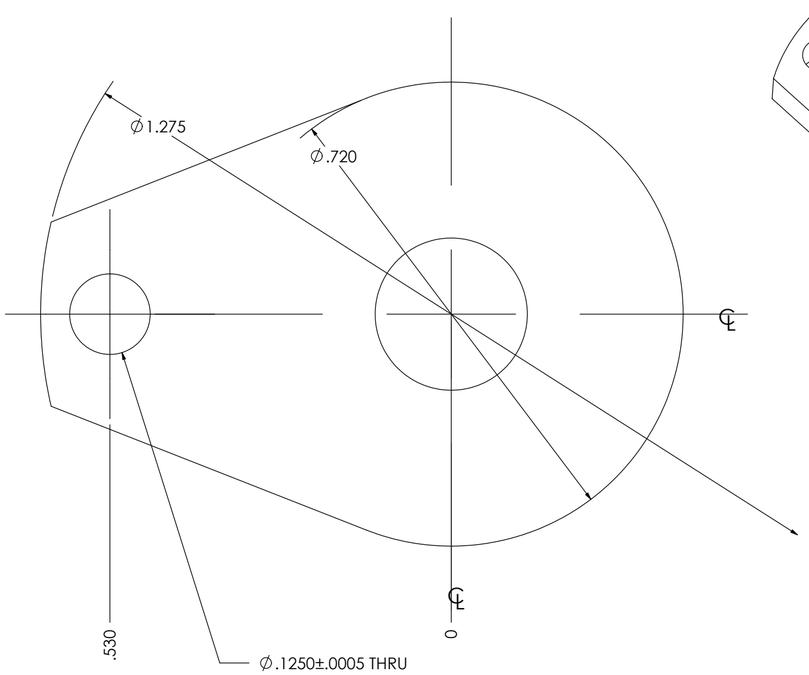

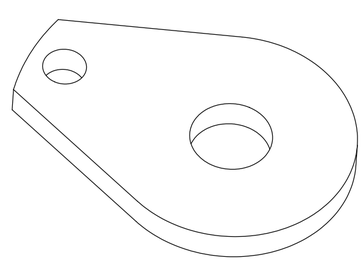

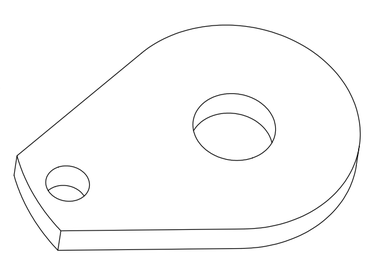

1002451-013
MANIPULATOR BELT CLAMP

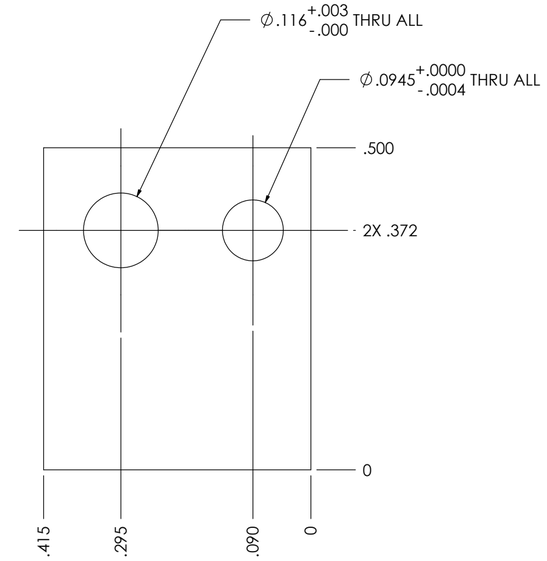

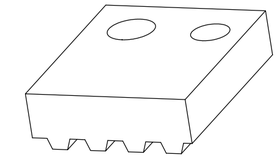

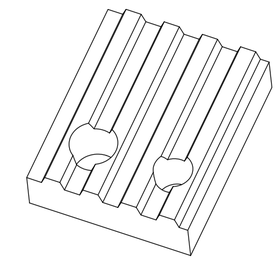

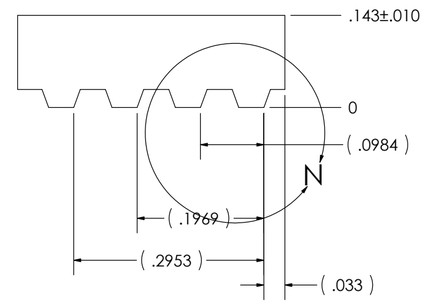

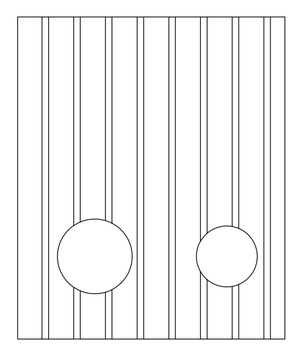

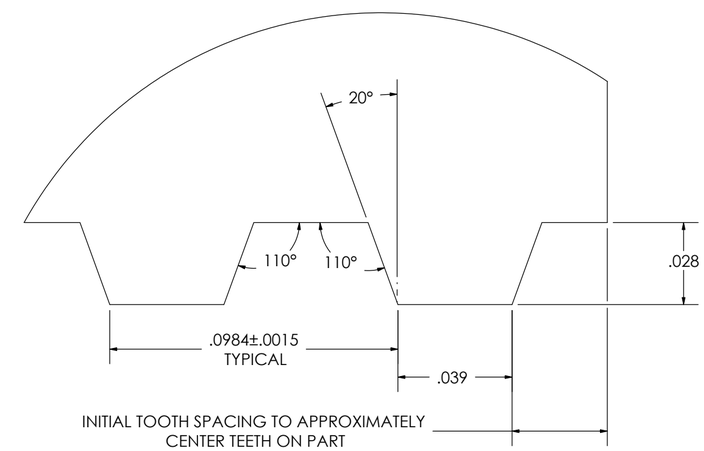

DETAIL N

ITEM NO.	PART NUMBER	DESCRIPTION	MATERIAL	QTY.
12	1002451-012	manipulator reed wheel	7075-T6 or -T651 Aluminum	1
13	1002451-013	manipulator belt clamp	Brass	2

BILL OF MATERIALS

last updated on: Wednesday, April 19, 2006 2:33:02 PM

Shop / Q.C.

Inspector	
Shop Foreman	
Engineer	
NEXT ASSY Description	NEXT ASSY Number

DO NOT SCALE DRAWING

UNLESS OTHERWISE SPECIFIED TOLERANCES ARE:

2 PLACE DIM	3 PLACE DIM	4 PLACE DIM	ANGLES
±.01	±.005	±.0005	±1°

1. DIMENSIONS ARE IN INCHES
2. DIMENSION LIMITS HELD AFTER PLATING
3. REMOVE BURRS & SHARP EDGES .010 MAX
4. MACHINED FILLET RADII .000 TO .015
5. MACHINED DIAMETERS ON A COMMON CENTERLINE CONCENTRIC WITHIN .OO5
6. PERPENDICULARITY & PARALLELISM OF MACHINED SURFACES .001 PER INCH. MAX .003 INCHES FOR SINGLE SURFACE.
7. SURFACE FINISH TO BE 32 MICRON UNLESS OTHERWISE SPECIFIED

APPROVALS DATE

ENGINEER Jason Feldman 831-775-1837

CHECKED

PROJECT NUMBER 701312.00

PROJECT ESP 2G

Monterey Bay Aquarium Research Institute
M B A R I
7700 Sandholdt Road
Moss Landing, CA
95039

manipulator

SIZE C | DWG. NO. 1002451 | REV. D

CAD FILE: X:\701312 ESP 2G\SolidWorks files\internal structure (1002209)

SHEET 13 OF 19

THE INFORMATION CONTAINED IN THIS DRAWING IS THE SOLE PROPERTY OF MBARI ANY REPRODUCTION IN PART OR WHOLE WITHOUT THE WRITTEN PERMISSION OF MBARI IS PROHIBITED

MANIPULATOR GRIPPER - assembly

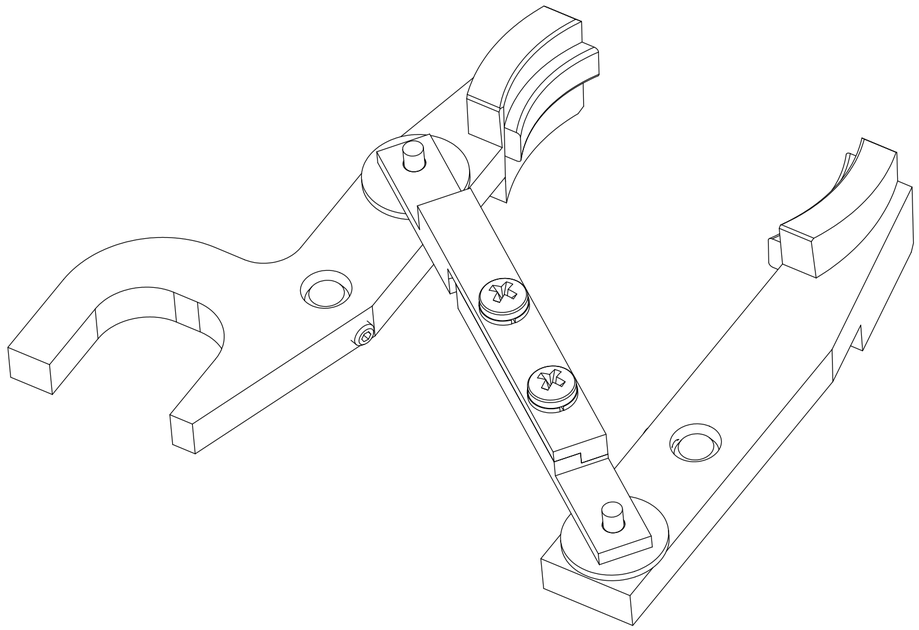

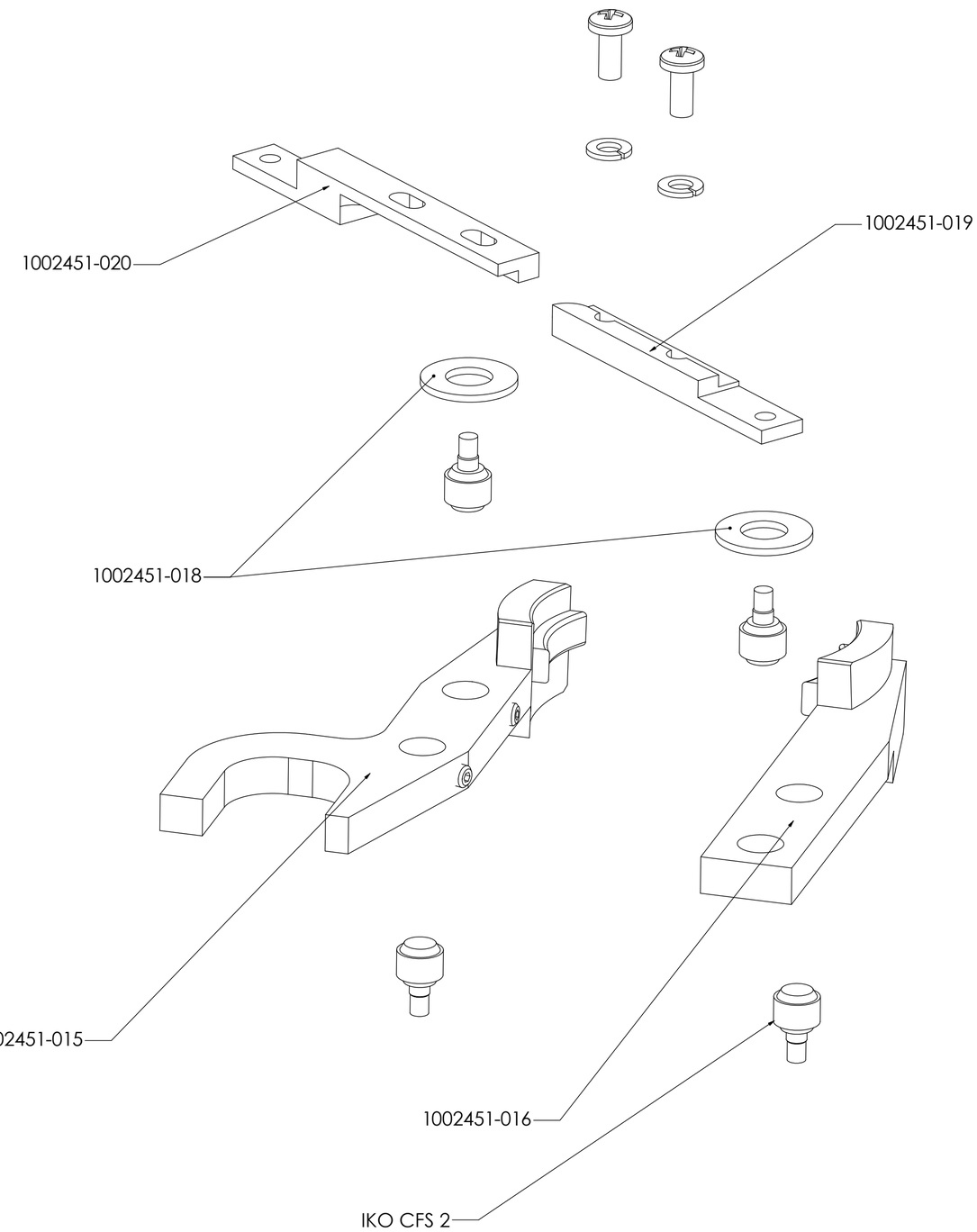

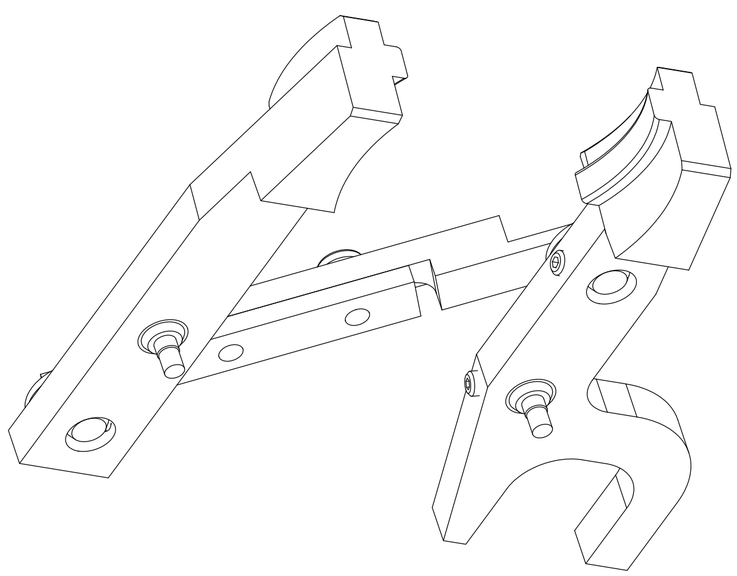

BILL OF MATERIALS

last updated on: Wednesday, April 19, 2006 2:33:02 PM

Shop / Q.C.	
Inspector	
Shop Foreman	
Engineer	
NEXT ASSY Description	NEXT ASSY Number
DO NOT SCALE DRAWING	

UNLESS OTHERWISE SPECIFIED TOLERANCES ARE:

2 PLACE DIM	3 PLACE DIM	4 PLACE DIM	ANGLES
±.01	±.005	±.0005	±1°

1. DIMENSIONS ARE IN INCHES
2. DIMENSION LIMITS HELD AFTER PLATING
3. REMOVE BURRS & SHARP EDGES .010 MAX
4. MACHINED FILLET RADII .000 TO .015
5. MACHINED DIAMETERS ON A COMMON CENTERLINE CONCENTRIC WITHIN .OO5
6. PERPENDICULARITY & PARALLELISM OF MACHINED SURFACES .001 PER INCH. MAX .003 INCHES FOR SINGLE SURFACE.
7. SURFACE FINISH TO BE 32 MICRON UNLESS OTHERWISE SPECIFIED

APPROVALS	DATE
ENGINEER Jason Feldman 831-775-1837	
CHECKED	
PROJECT NUMBER 701312.00	
PROJECT ESP 2G	

Monterey Bay Aquarium Research Institute
M B A R I
7700 Sandholdt Road
Moss Landing, CA
95039

manipulator

SIZE	DWG. NO.	REV.
C	1002451	D

CAD FILE: X:\701312 ESP 2G\SolidWorks files\internal structure (1002209)

SHEET 14 OF 19

THE INFORMATION CONTAINED IN THIS DRAWING IS THE SOLE PROPERTY OF MBARI ANY REPRODUCTION IN PART OR WHOLE WITHOUT THE WRITTEN PERMISSION OF MBARI IS PROHIBITED

41002451-015
GRIPPER WITH CAM

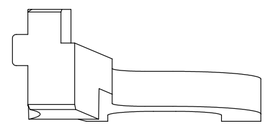

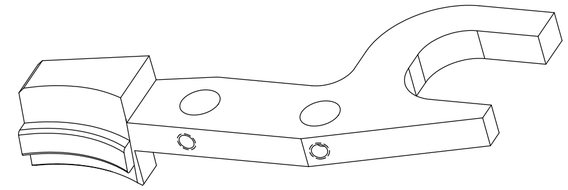

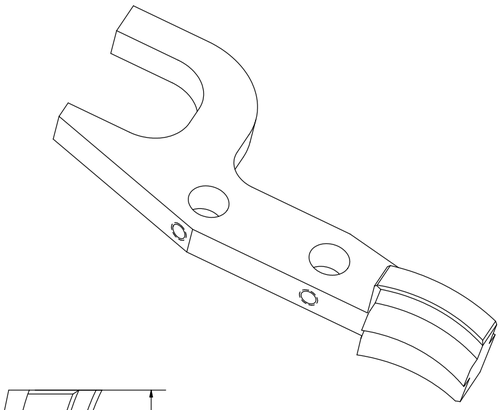

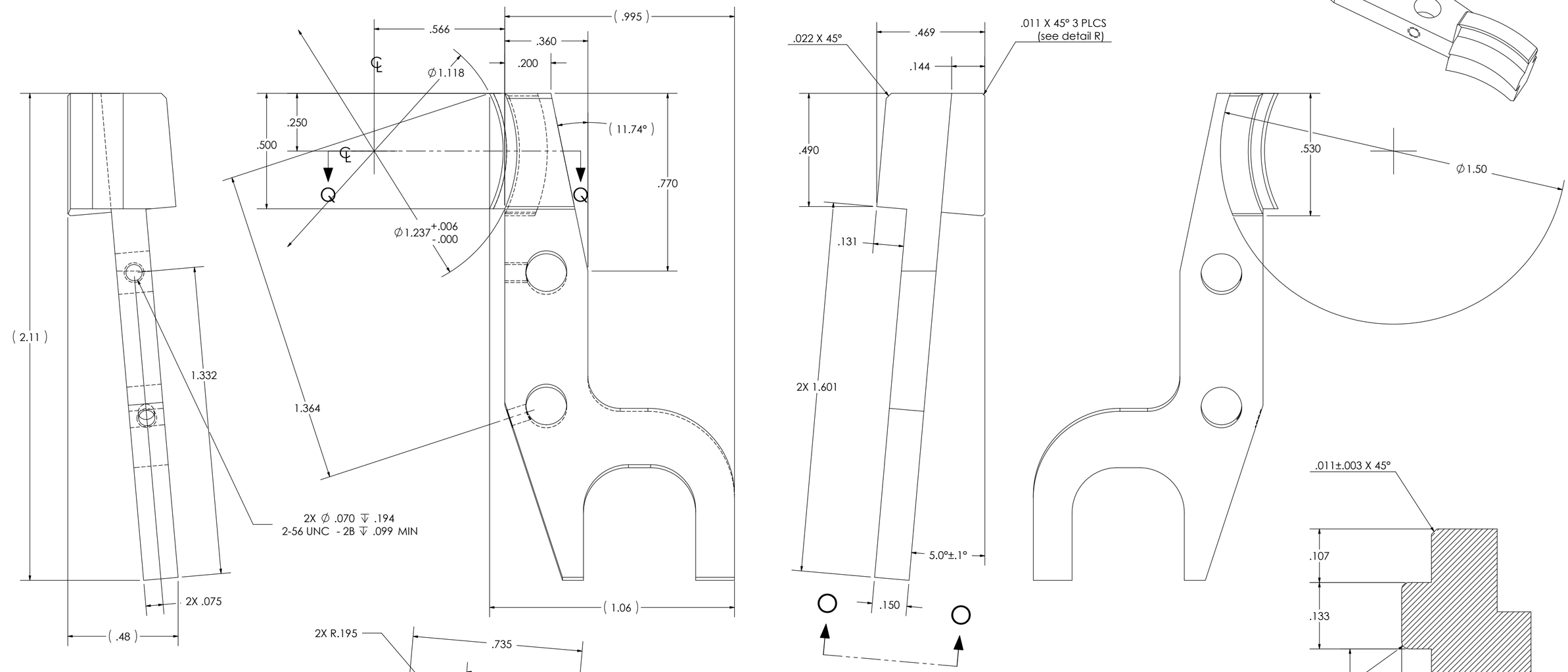

SECTION Q-Q
SCALE 6.5 : 1

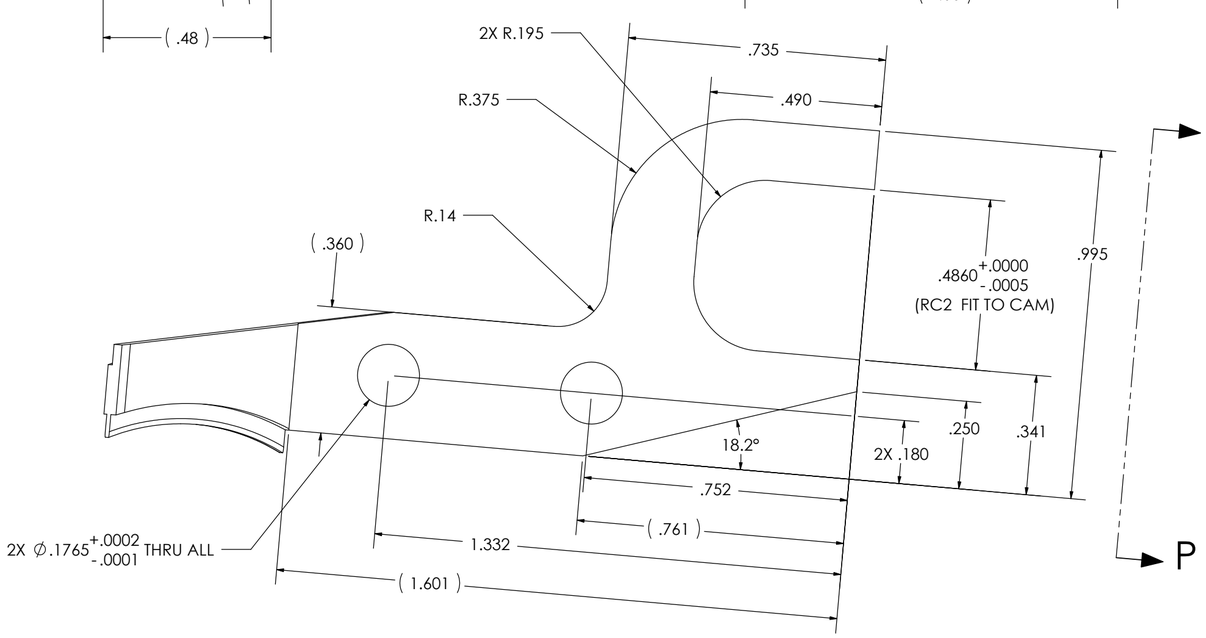

VIEW P-P

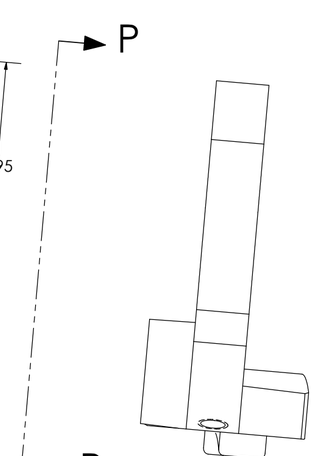

VIEW O-O

ITEM NO.	PART NUMBER	DESCRIPTION	MATERIAL	QTY.
15	1002451-015	Gripper - actuated	Aluminum 7075 T-6	1

BILL OF MATERIALS

last updated on: Wednesday, April 19, 2006 2:33:02 PM

Shop / Q.C.
Inspector
Shop Foreman
Engineer
NEXT ASSY Description | NEXT ASSY Number
DO NOT SCALE DRAWING

UNLESS OTHERWISE SPECIFIED TOLERANCES ARE:

2 PLACE DIM	3 PLACE DIM	4 PLACE DIM	ANGLES
±.01	±.005	±.0005	±1°

1. DIMENSIONS ARE IN INCHES
2. DIMENSION LIMITS HELD AFTER PLATING
3. REMOVE BURRS & SHARP EDGES .010 MAX
4. MACHINED FILLET RADII .000 TO .015
5. MACHINED DIAMETERS ON A COMMON CENTERLINE CONCENTRIC WITHIN .OO5
6. PERPENDICULARITY & PARALLELISM OF MACHINED SURFACES .001 PER INCH, MAX .003 INCHES FOR SINGLE SURFACE.
7. SURFACE FINISH TO BE 32 MICRON UNLESS OTHERWISE SPECIFIED

APPROVALS | DATE
ENGINEER: Jason Feldman 831-775-1837
CHECKED

PROJECT NUMBER: 701312.00
PROJECT: ESP 2G

Monterey Bay Aquarium Research Institute
7700 Sandholdt Road
Moss Landing, CA
95039

manipulator

SIZE: C | DWG. NO. 1002451 | REV. D

CAD FILE: X:\701312 ESP 2G\SolidWorks files\internal structure (1002209)

SHEET 15 OF 19

THE INFORMATION CONTAINED IN THIS DRAWING IS THE SOLE PROPERTY OF MBARI ANY REPRODUCTION IN PART OR WHOLE WITHOUT THE WRITTEN PERMISSION OF MBARI IS PROHIBITED

41002451-016
GRIPPER SIMPLE

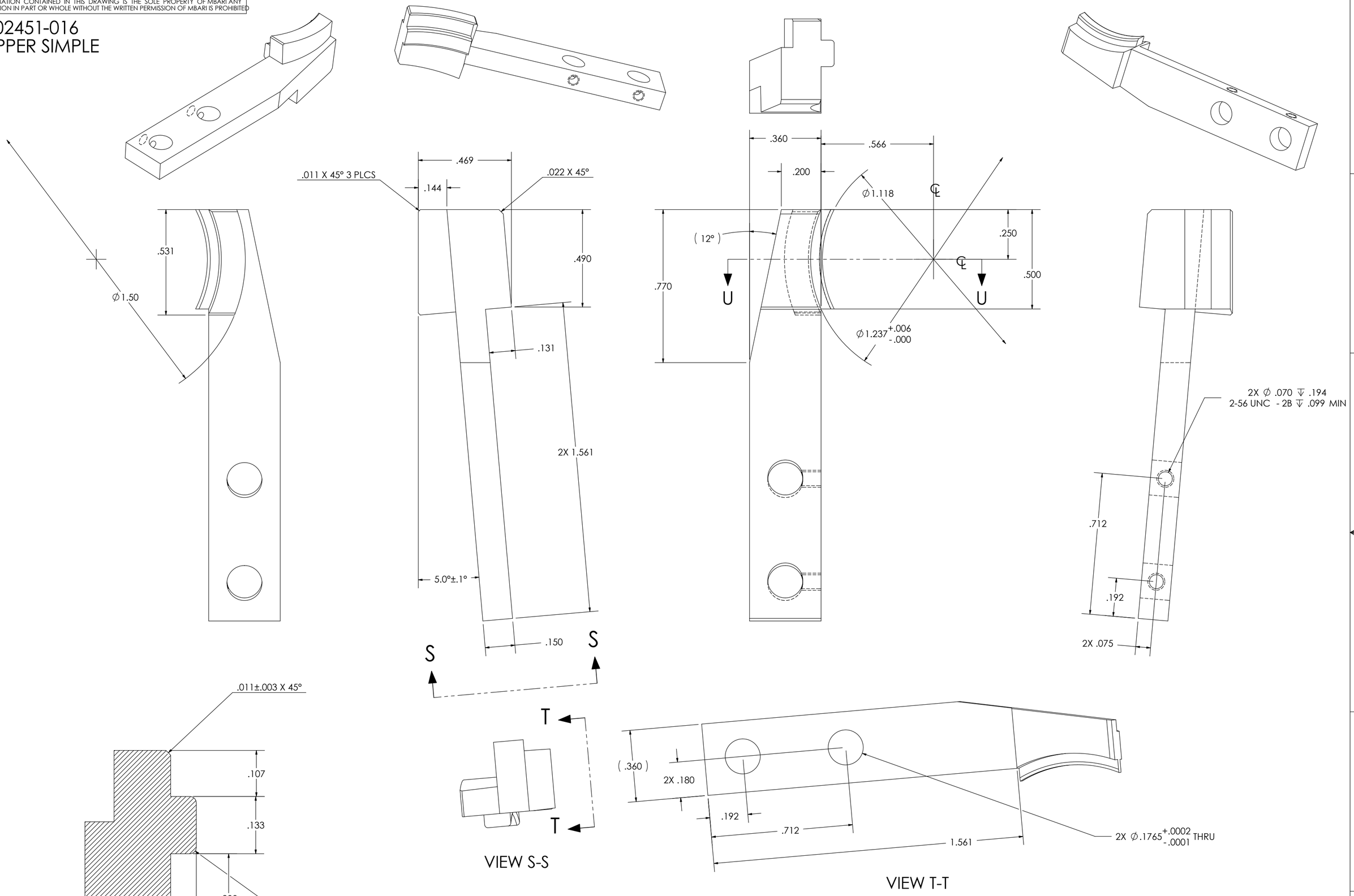

SECTION U-U
SCALE 6.5 : 1

VIEW S-S

VIEW T-T

ITEM NO.	PART NUMBER	DESCRIPTION	MATERIAL	QTY.
16	1002451-016	Gripper - driven	Aluminum 7075 T-6	1

BILL OF MATERIALS

last updated on: Wednesday, April 19, 2006 2:33:02 PM

Shop / Q.C.
Inspector
Shop Foreman
Engineer
NEXT ASSY Description | NEXT ASSY Number

DO NOT SCALE DRAWING

UNLESS OTHERWISE SPECIFIED TOLERANCES ARE:

2 PLACE DIM	3 PLACE DIM	4 PLACE DIM	ANGLES
±.01	±.005	±.0005	±1°

1. DIMENSIONS ARE IN INCHES
2. DIMENSION LIMITS HELD AFTER PLATING
3. REMOVE BURRS & SHARP EDGES .010 MAX
4. MACHINED FILLET RADII .000 TO .015
5. MACHINED DIAMETERS ON A COMMON CENTERLINE CONCENTRIC WITHIN .OO5
6. PERPENDICULARITY & PARALLELISM OF MACHINED SURFACES .001 PER INCH. MAX .003 INCHES FOR SINGLE SURFACE.
7. SURFACE FINISH TO BE 32 MICRON UNLESS OTHERWISE SPECIFIED

APPROVALS DATE
ENGINEER Jason Feldman 831-775-1837
CHECKED
PROJECT NUMBER 701312.00
PROJECT ESP 2G

Monterey Bay Aquarium Research Institute
M B A R I
7700 Sandholdt Road
Moss Landing, CA
95039

manipulator

SIZE C | DWG. NO. 1002451 | REV. D

CAD FILE: X:\701312 ESP 2G\SolidWorks files\internal structure (1002209)

SHEET 16 OF 19

THE INFORMATION CONTAINED IN THIS DRAWING IS THE SOLE PROPERTY OF MBARI ANY REPRODUCTION IN PART OR WHOLE WITHOUT THE WRITTEN PERMISSION OF MBARI IS PROHIBITED

1002451-017
SPACER - CAM

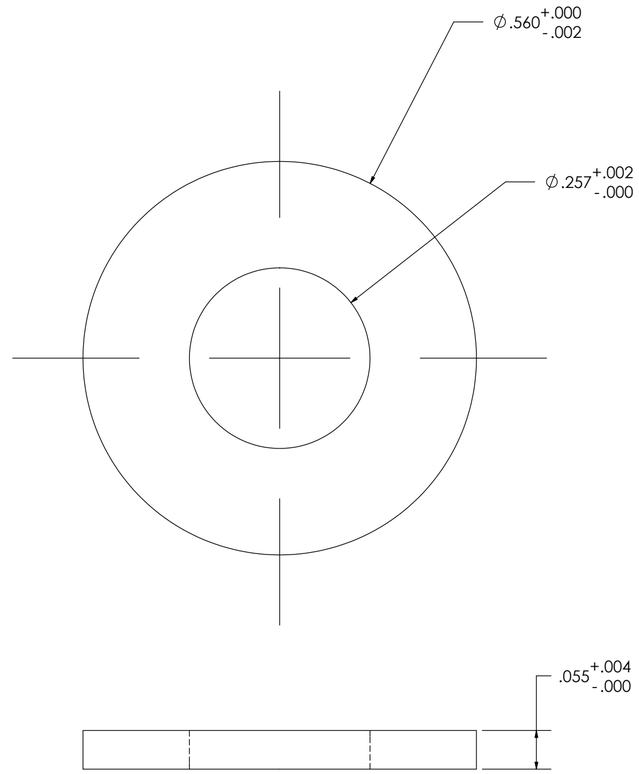

1002451-018
SPACER - GRIPPER

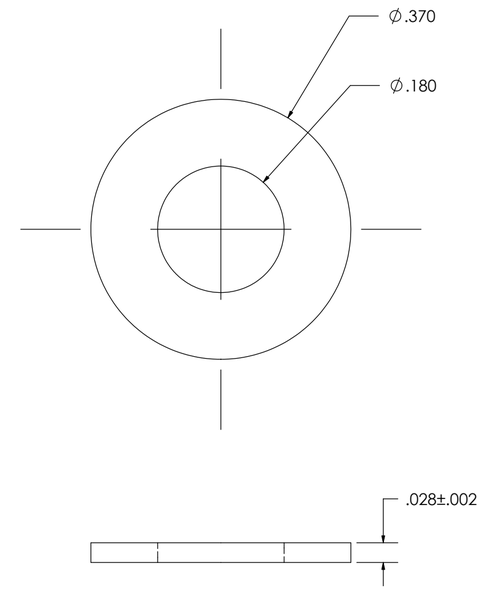

1002451-005
SPACER - TIMING PULLEY

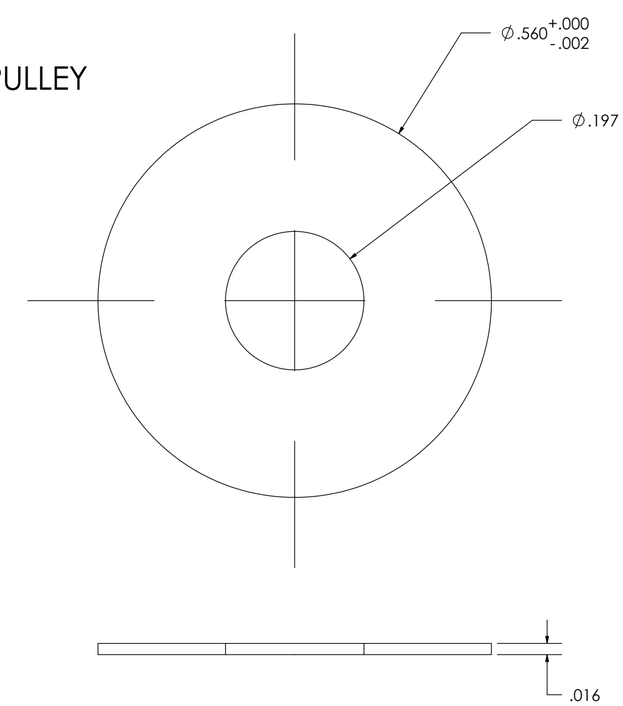

ITEM NO.	PART NUMBER	DESCRIPTION	MATERIAL	QTY.
17	1002451-017	Spacer - cam	Vespel SP-21	2
18	1002451-018	Spacer - gripper	Vespel S-21	4
19	1002451-005	Spacer - timing pulley	Vespel SP-21	3

BILL OF MATERIALS

last updated on: Wednesday, April 19, 2006 2:33:02 PM

Shop / Q.C.
Inspector
Shop Foreman
Engineer
NEXT ASSY Description | NEXT ASSY Number
DO NOT SCALE DRAWING

UNLESS OTHERWISE SPECIFIED TOLERANCES ARE:

2 PLACE DIM	3 PLACE DIM	4 PLACE DIM.	ANGLES
±.01	±.005	±.0005	±1°

1. DIMENSIONS ARE IN INCHES
2. DIMENSION LIMITS HELD AFTER PLATING
3. REMOVE BURRS & SHARP EDGES .010 MAX
4. MACHINED FILLET RADII .000 TO .015
5. MACHINED DIAMETERS ON A COMMON CENTERLINE CONCENTRIC WITHIN .OO5
6. PERPENDICULARITY & PARALLELISM OF MACHINED SURFACES .001 PER INCH, MAX .003 INCHES FOR SINGLE SURFACE.
7. SURFACE FINISH TO BE 32 MICRON UNLESS OTHERWISE SPECIFIED

APPROVALS DATE
ENGINEER Jason Feldman 831-775-1837
CHECKED

Monterey Bay Aquarium Research Institute
M B A R I
7700 Sandholdt Road
Moss Landing, CA
95039

PROJECT NUMBER 701312.00
PROJECT ESP 2G

manipulator

SIZE C | DWG. NO. 1002451 | REV. D

CAD FILE: X:\701312 ESP 2G\SolidWorks files\internal structure (1002209)

THE INFORMATION CONTAINED IN THIS DRAWING IS THE SOLE PROPERTY OF MBARI ANY REPRODUCTION IN PART OR WHOLE WITHOUT THE WRITTEN PERMISSION OF MBARI IS PROHIBITED

1002451-019
GRIPPER LINK TAPPED

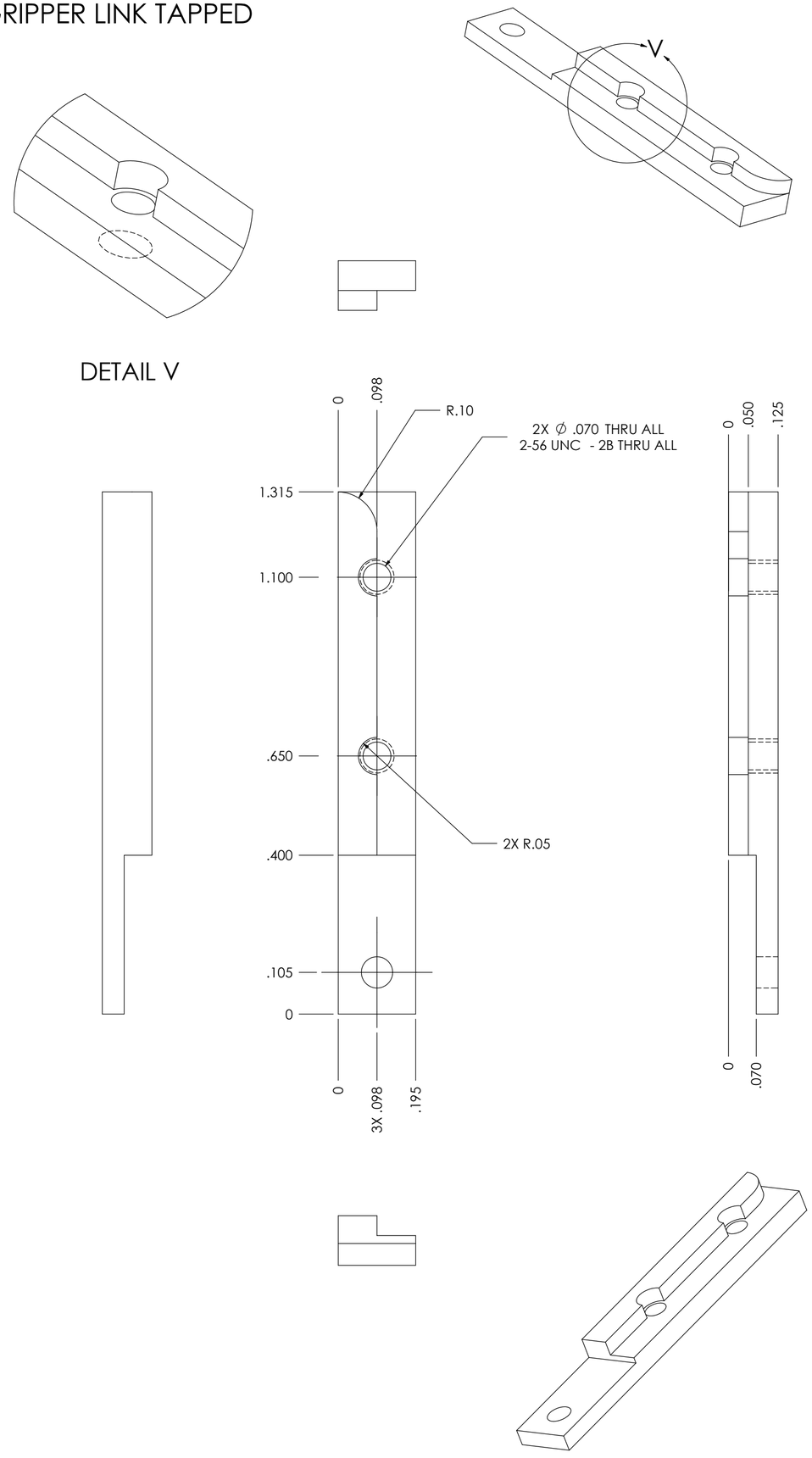

1002451-020
GRIPPER LINK SLOTTED

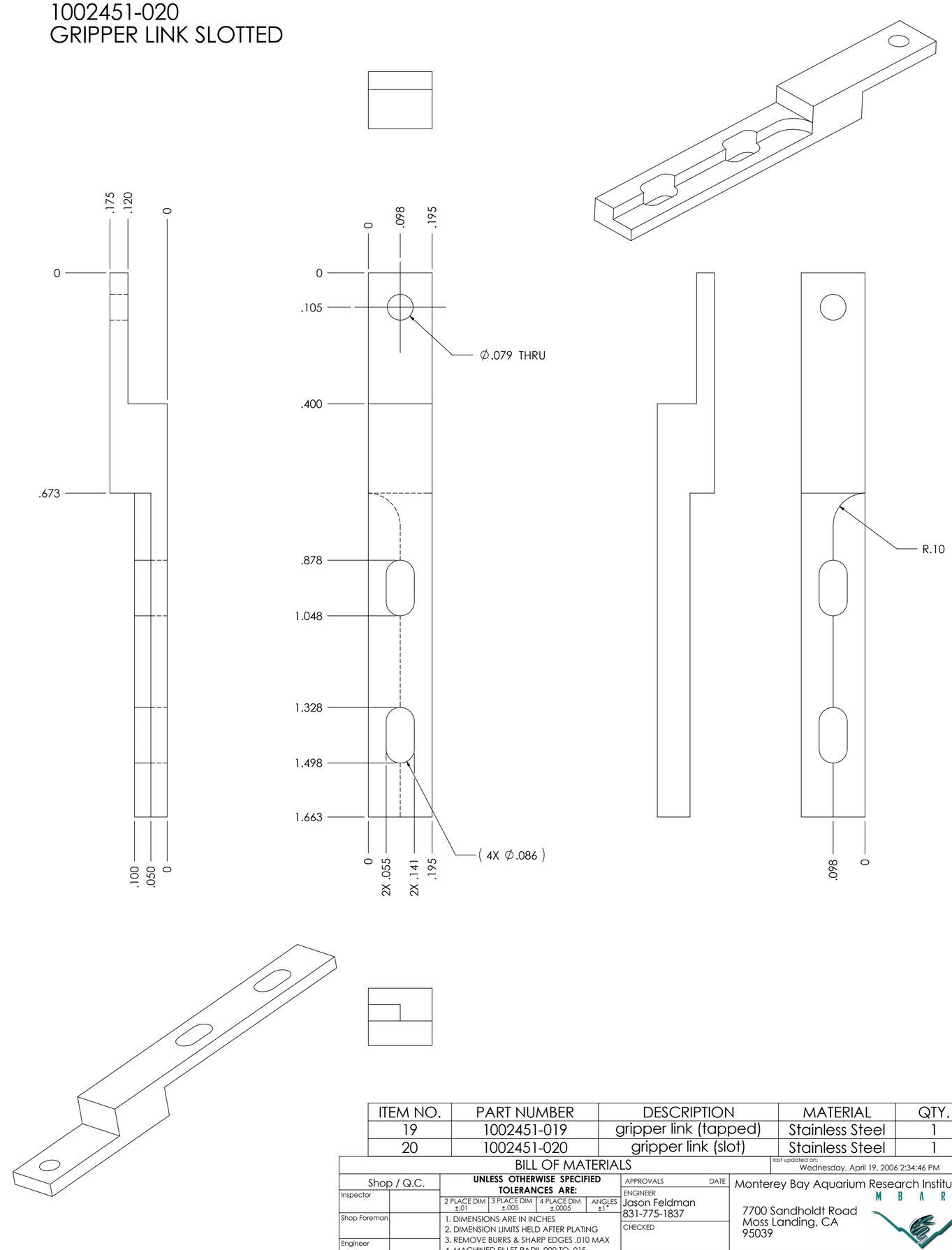

ITEM NO.	PART NUMBER	DESCRIPTION	MATERIAL	QTY.
19	1002451-019	gripper link (tapped)	Stainless Steel	1
20	1002451-020	gripper link (slot)	Stainless Steel	1

BILL OF MATERIALS

last updated on: Wednesday, April 19, 2006 2:34:46 PM

Shop / Q.C.
Inspector
Shop Foreman
Engineer
NEXT ASSY Description | NEXT ASSY Number

DO NOT SCALE DRAWING

UNLESS OTHERWISE SPECIFIED TOLERANCES ARE:

2 PLACE DIM	3 PLACE DIM	4 PLACE DIM	ANGLES
±.01	±.005	±.0005	±1°

1. DIMENSIONS ARE IN INCHES
2. DIMENSION LIMITS HELD AFTER PLATING
3. REMOVE BURRS & SHARP EDGES .010 MAX
4. MACHINED FILLET RADII .000 TO .015
5. MACHINED DIAMETERS ON A COMMON CENTERLINE CONCENTRIC WITHIN .OO5
6. PERPENDICULARITY & PARALLELISM OF MACHINED SURFACES .001 PER INCH, MAX .003 INCHES FOR SINGLE SURFACE.
7. SURFACE FINISH TO BE 32 MICRON UNLESS OTHERWISE SPECIFIED

APPROVALS | DATE
ENGINEER: Jason Feldman 831-775-1837
CHECKED
PROJECT NUMBER: 900312.00
PROJECT: ESP 2G

Monterey Bay Aquarium Research Institute
M B A R I
7700 Sandholdt Road
Moss Landing, CA
95039

manipulator

SIZE: C | DWG. NO. 1002451 | REV. D

CAD FILE: X:\701312 ESP 2G\SolidWorks files\internal structure (1002209)

SHEET 18 OF 19

THE INFORMATION CONTAINED IN THIS DRAWING IS THE SOLE PROPERTY OF MBARI ANY REPRODUCTION IN PART OR WHOLE WITHOUT THE WRITTEN PERMISSION OF MBARI IS PROHIBITED

NOTES FOR MAGNAPLATE HCR PROCESSING
SURFACE GROWTH TO BE .0005" to .0010"
(TOTAL COATING THICKNESS .0010" to .0020")

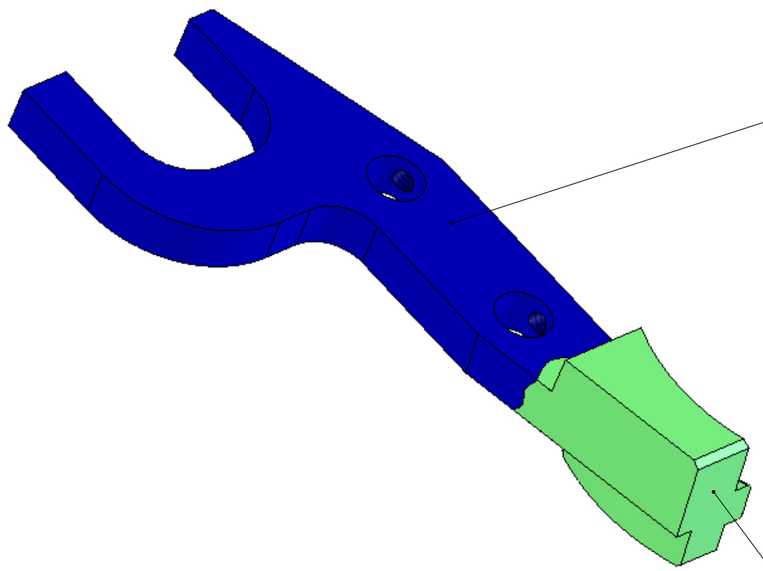

NO MAGNAPLATE HCR IN BLUE AREAS

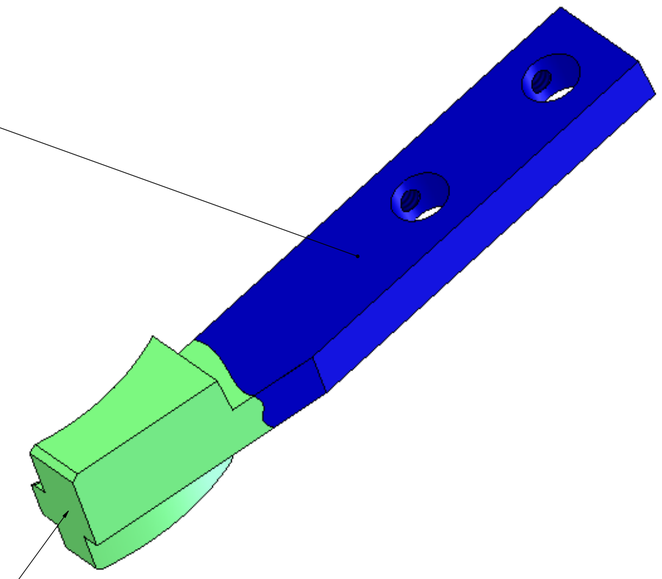

MAGNAPLATE HCR GREEN AREAS ONLY

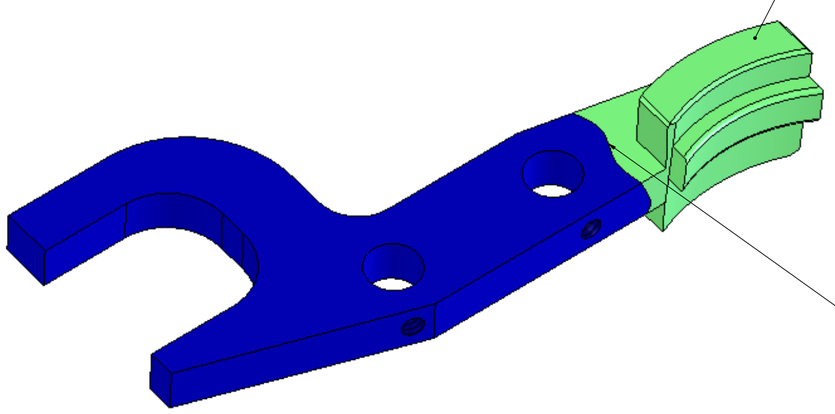

FRINGE AREA NON-CRITICAL
(OK for plating to extend slightly into non-plated area

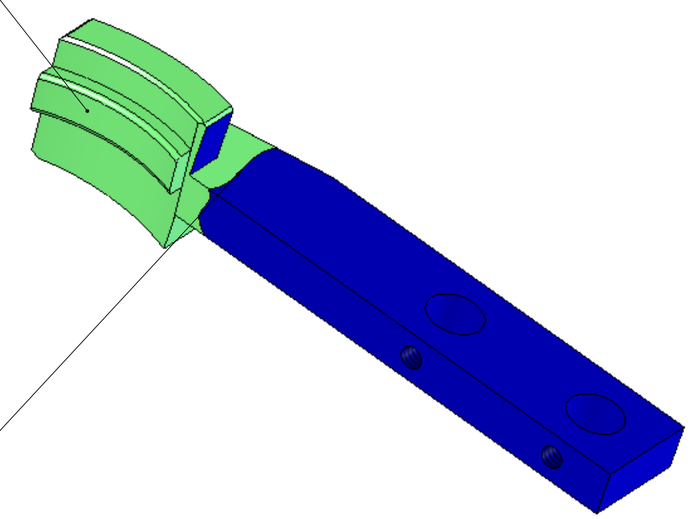

MBARI part number: 1002451-016

MBARI part number: 1002451-015

BILL OF MATERIALS

last updated on: Wednesday, April 19, 2006 2:34:46 PM

Shop / Q.C.	
Inspector	
Shop Foreman	
Engineer	
NEXT ASSY Description	NEXT ASSY Number
DO NOT SCALE DRAWING	

UNLESS OTHERWISE SPECIFIED TOLERANCES ARE:

2 PLACE DIM	3 PLACE DIM	4 PLACE DIM	ANGLES
±.01	±.005	±.0005	±1°

1. DIMENSIONS ARE IN INCHES
2. DIMENSION LIMITS HELD AFTER PLATING
3. REMOVE BURRS & SHARP EDGES .010 MAX
4. MACHINED FILLET RADII .000 TO .015
5. MACHINED DIAMETERS ON A COMMON CENTERLINE CONCENTRIC WITHIN .OO5
6. PERPENDICULARITY & PARALLELISM OF MACHINED SURFACES .001 PER INCH, MAX .003 INCHES FOR SINGLE SURFACE.
7. SURFACE FINISH TO BE 32 MICRON UNLESS OTHERWISE SPECIFIED

APPROVALS	DATE
ENGINEER Jason Feldman 831-775-1837	
CHECKED	
PROJECT NUMBER 701312.00	
PROJECT ESP 2G	

Monterey Bay Aquarium Research Institute
M B A R I
7700 Sandholdt Road
Moss Landing, CA
95039

manipulator

SIZE	DWG. NO.	REV.
C	1002451	D

CAD FILE: X:\701312 ESP 2G\SolidWorks files\internal structure (1002209)

SHEET 19 OF 19