THE INFORMATION CONTAINED IN THIS DRAWING IS THE SOLE PROPERTY OF MBARI ANY REPRODUCTION IN PART OR WHOLE WITHOUT THE WRITTEN PERMISSION OF MBARI IS PROHIBITED

TITANIUM GRADE 2 OR EQUIVALENT

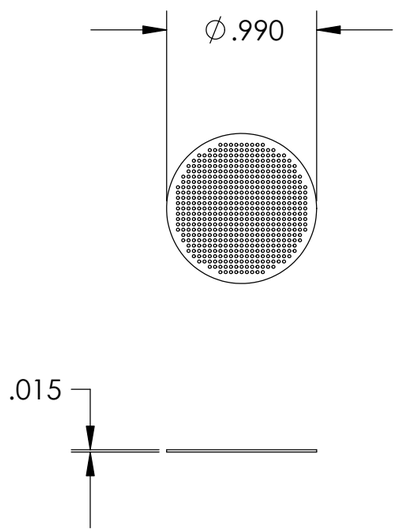

1002432-001

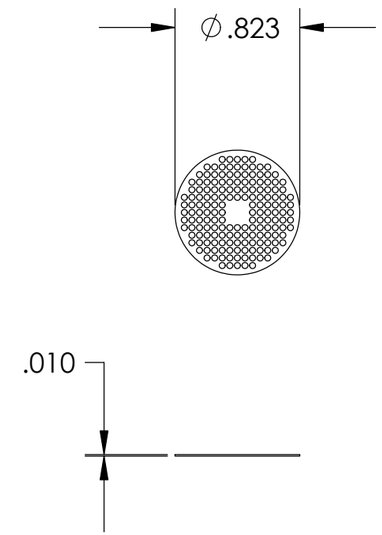

1002432-002

ITEM NO.	PART NUMBER	DESCRIPTION	MATERIAL	QTY.
1	1002432-001	photofabricated frit	Titanium Grade 2	100
2	1002432-002	photofabricated diffuser	Titanium Grade 2	50

BILL OF MATERIALS

last updated on: Monday, March 28, 2005 1:37:40 PM

Shop / Q.C.	
Inspector	
Shop Foreman	
Engineer	
NEXT ASSY Description	NEXT ASSY Number
DO NOT SCALE DRAWING	

UNLESS OTHERWISE SPECIFIED TOLERANCES ARE:

1 PLACE DIM	2 PLACE DIM	3 PLACE DIM	ANGLES
±1/16	±.01	±.005	±1°

1. DIMENSIONS ARE IN INCHES
2. DIMENSION LIMITS HELD AFTER PLATING
3. REMOVE BURRS AND SHARP EDGES .010 MAX
4. MACHINED FILLET RADII .010 TO .020
5. MACHINED DIAMETERS ON A COMMON CENTERLINE CONCENTRIC WITHIN .005
6. PERPENDICULARITY & PARALLELISM OF MACHINED SURFACES .001 PER INCH. MAX .010 INCHES FOR SINGLE SURFACE.
7. SURFACE FINISH TO BE 32 MICRON UNLESS OTHERWISE SPECIFIED

APPROVALS DATE

ENGINEER DATE
Jason Feldman
831-775-1837

CHECKED DATE

PROJECT NUMBER
701312.00

PROJECT
ESP 2G

Monterey Bay Aquarium Research Institute
M B A R I
7700 Sandholdt Road
Moss Landing, CA
95039

Titanium frit - 2nd prototype

SIZE B | DWG. NO. 1002432 | REV. A

CAD FILE: 1002432 (photofabricated frit) | SHEET 1 OF 1