DWG NO:	90536	SHEET 1

REVISIONS				
ZONE	REV.	DESCRIPTION	DATE	APPROVED

APL SHOP INFORMATION	
Worktag	GR016798
TASK #	M9Y
QUANTITY	1
ORIGINATOR	JESS NOE
PHONE #	206-218-6167
EMAIL	noej@uw.edu

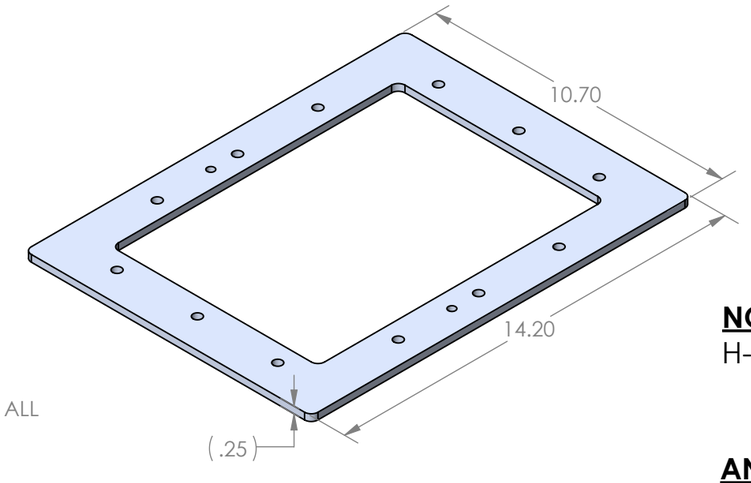

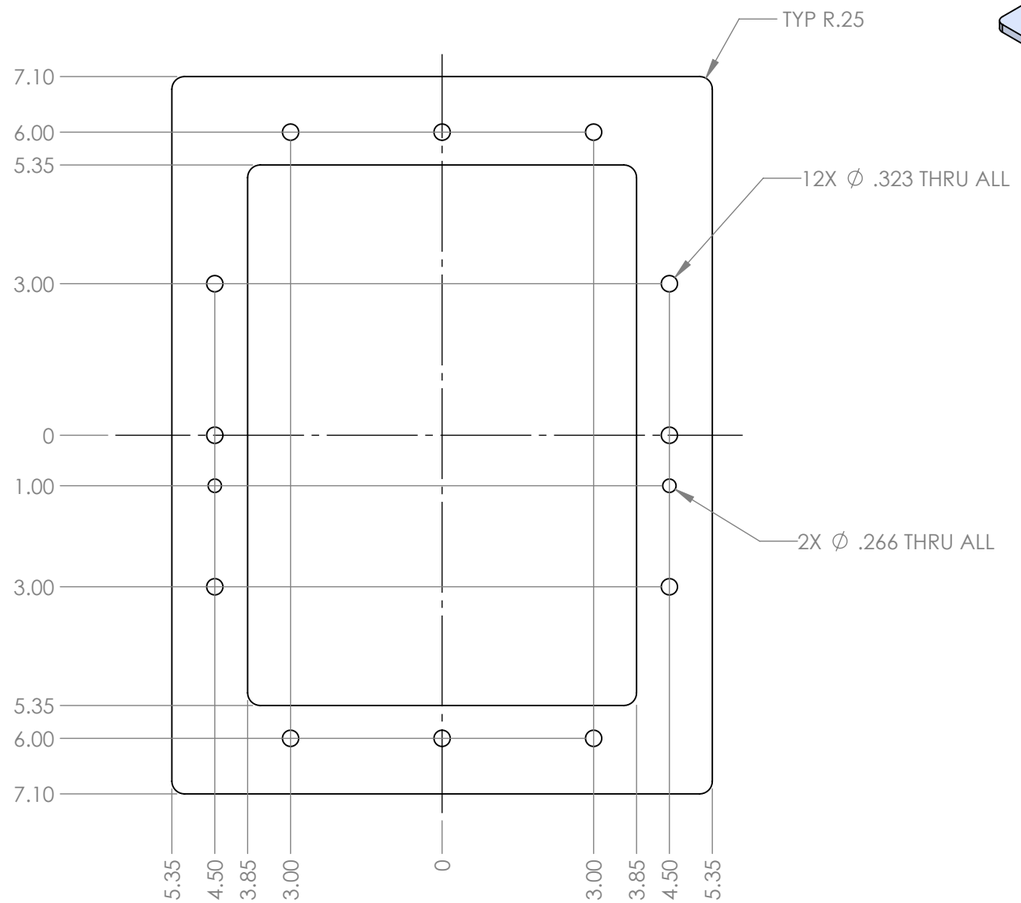

NOMINAL DIMS OF PART:
H-14.2" W-10.7" Th 0.25"

ANODIZING INSTRUCTIONS:
MIL-PRF-8625, TYPE II, CLASS 1
NICKEL-ACETATE SEAL
NO MASKING NEEDED
OK TO SUSPEND FROM ANY SURFACE

NOTES:
BREAK SHARP EDGES

UNLESS OTHERWISE NOTED

- APPLICABLE STANDARDS: MIL-STD-XXX
- SURFACE FINISH: 125RMS
- MACHINED FILLETS: R.015 MAX
- REMOVE ALL BURRS, BREAK SHARP EDGES .015 MAX
- DIMENSIONS AND SURFACE FINISH TO BE MET AFTER SPECIFIED COATINGS

THIRD ANGLE PROJECTION

DIMENSIONS ARE IN INCHES
WEIGHT IS IN POUNDS

(X.X) INDICATES A REPEATED OR INFORMATIONAL DIMENSION

TOLERANCES:
FRACTIONS: ± 1/16
.X: ± .050
.XX: ± .030
.XXX: ± .005
ANGLES: ± 1.0

MATERIAL: 6061 Alloy

WEIGHT: 1.669

APPROVALS		DATE
CHIEF ENGR:		
SYS ENGR:		
QA/SAFETY:		
SR ENGR:		
ENGINEER:	JESS NOE	--/--/----
CHECKED:		
DRAWN:	JESS NOE	--/--/----

APPLIED PHYSICS LABORATORY
UNIVERSITY OF WASHINGTON
1013 NE 40TH ST. SEATTLE, WA. 98105

TITLE: CHASSIS PLATE, INTERNAL SIDE

PROJECT FOLDER: MARS

DO NOT SCALE DRAWING

CAD FILE: 90536

SIZE:	CAGE CODE:	DWG NO:	REV:
B	98514	90536	A

SHEET 1 OF 1