DWG NO:	90537	SHEET 1

REVISIONS				
ZONE	REV.	DESCRIPTION	DATE	APPROVED

APL SHOP INFORMATION	
Worktag	GR016798
TASK #	M9Y
QUANTITY	1
ORIGINATOR	JESS NOE
PHONE #	206-218-6167
EMAIL	noej@uw.edu

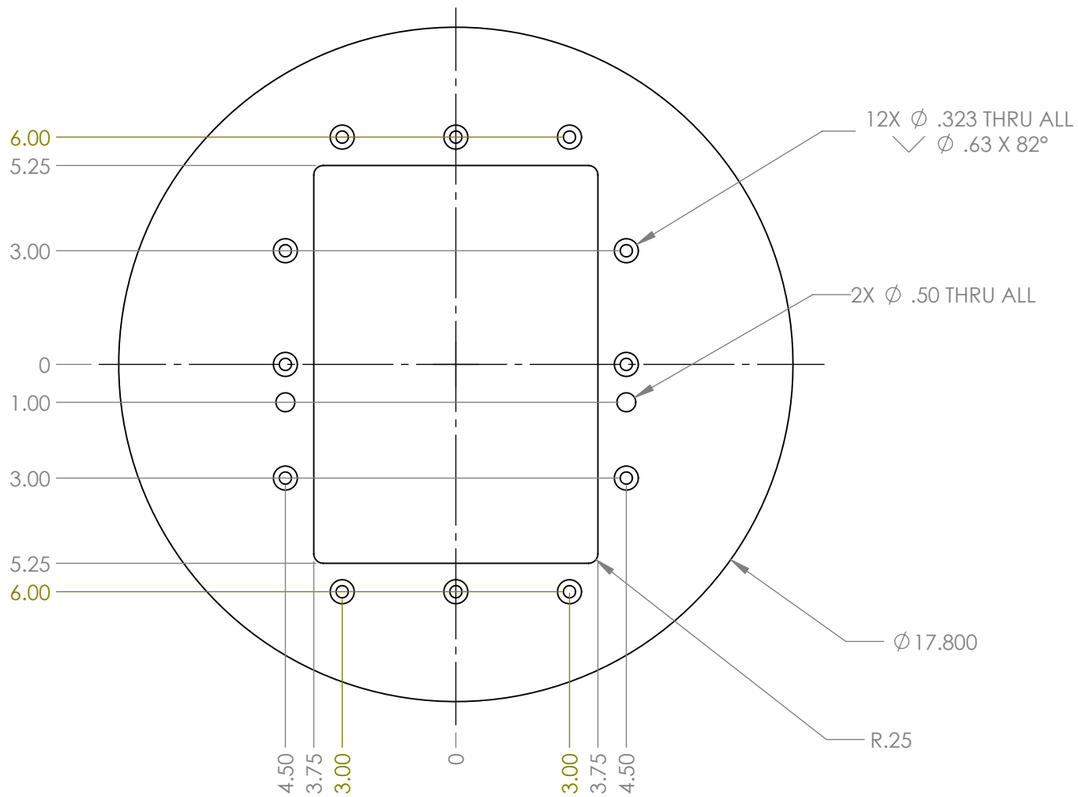

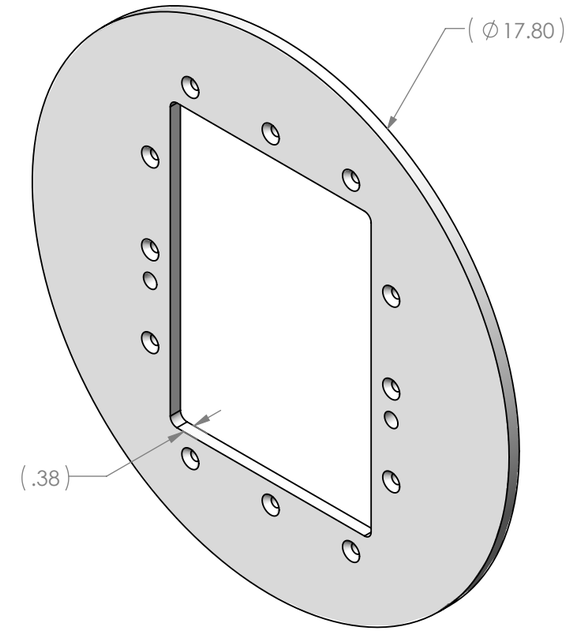

NOMINAL DIMS OF PART:
H-17.8" W-17.8" Th 0.375"
MMC 8492K441

NOTES:
BREAK SHARP EDGES

UNLESS OTHERWISE NOTED		APPROVALS		DATE
- APPLICABLE STANDARDS: MIL-STD-XXX - SURFACE FINISH: 125RMS - MACHINED FILLETS: R.015 MAX - REMOVE ALL BURRS, BREAK SHARP EDGES .015 MAX - DIMENSIONS AND SURFACE FINISH TO BE MET AFTER SPECIFIED COATINGS	DIMENSIONS ARE IN INCHES WEIGHT IS IN POUNDS (X.X) INDICATES A REPEATED OR INFORMATIONAL DIMENSION TOLERANCES: FRACTIONS: ± 1/16 .X: ± .050 .XX: ± .030 .XXX: ± .005 ANGLES: ± 1.0	CHIEF ENGR:		
		SYS ENGR:		
		QA/SAFETY:		
		SR ENGR:		
		ENGINEER:	JESS NOE	--/--/----
		CHECKED:		
	MATERIAL: ANY DELRIN / ACETAL	DRAWN:	JESS NOE	--/--/----
THIRD ANGLE PROJECTION		PROJECT FOLDER: MARS		

APPLIED PHYSICS LABORATORY
UNIVERSITY OF WASHINGTON
1013 NE 40TH ST. SEATTLE, WA. 98105

TITLE: CHASSIS, GUIDE PLATE, 17.80"

SIZE:	CAGE CODE:	DWG NO:	REV:
B	98514	90537	A

WEIGHT: 3.255 | **DO NOT SCALE DRAWING** | CAD FILE: 90537 | SHEET 1 OF 1