DWG NO:	XXXXXX	SHEET 1

REVISIONS				
ZONE	REV.	DESCRIPTION	DATE	APPROVED
	-	INITIAL RELEASE		

NOTES:

BREAK SHARP EDGES

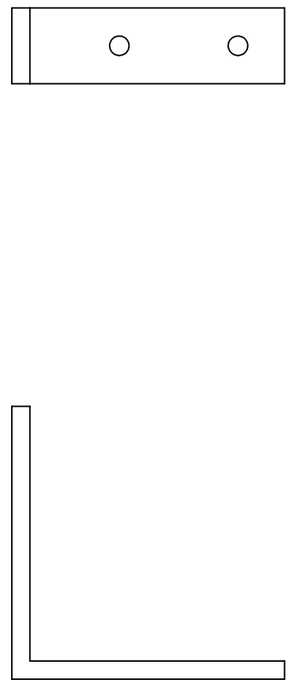

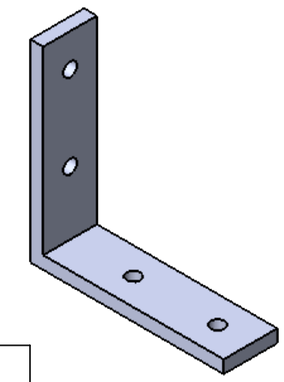

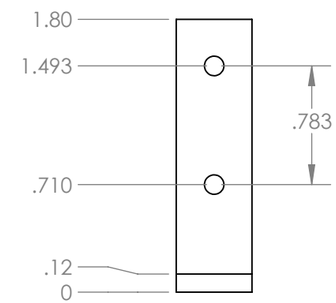

APL SHOP INFORMATION	
WORKTAG	XXX
TASK #	AAA
QUANTITY	x
ORIGINATOR	JESS NOE
PHONE #	206-218-6167
EMAIL	noej@uw.edu

ENGR NOTES:

my note here

UNLESS OTHERWISE NOTED		APPROVALS		DATE
- APPLICABLE STANDARDS: MIL-STD-XXX - SURFACE FINISH: 125RMS - MACHINED FILLETS: R.015 MAX - REMOVE ALL BURRS, BREAK SHARP EDGES .015 MAX - DIMENSIONS AND SURFACE FINISH TO BE MET AFTER SPECIFIED COATINGS	DIMENSIONS ARE IN INCHES WEIGHT IS IN POUNDS (X.X) INDICATES A REPEATED OR INFORMATIONAL DIMENSION TOLERANCES: FRACTIONS: ± 1/16 .X: ± .050 .XX: ± .030 .XXX: ± .005 ANGLES: ± 1.0	CHIEF ENGR:		
		SYS ENGR:		
		QA/SAFETY:		
		SR ENGR:		
		ENGINEER:	JESS NOE	--/--/----
		CHECKED:		
	MATERIAL:	DRAWN:	JESS NOE	--/--/----
THIRD ANGLE PROJECTION	Material <not specified>	PROJECT FOLDER: ---		

APPLIED PHYSICS LABORATORY
UNIVERSITY OF WASHINGTON
1013 NE 40TH ST. SEATTLE, WA. 98105

TITLE: CORNER BRACKET, PPS BOARD

SIZE:	CAGE CODE:	DWG NO:	REV:
B	98514	XXXXXX	-

WEIGHT: 0.007 | **DO NOT SCALE DRAWING** | CAD FILE: MMC_19155A36_L-1-3-4_304 Stainless Steel Corner Bracket | SHEET 1 OF 1