DWG NO:	90683	SHEET 1

REVISIONS				
ZONE	REV.	DESCRIPTION	DATE	APPROVED

NOTES:
BREAK SHARP EDGES

APL SHOP INFORMATION	
Worktag	GR016798
TASK #	M9Y
QUANTITY	2
ORIGINATOR	JESS NOE
PHONE #	206-218-6167
EMAIL	noej@uw.edu

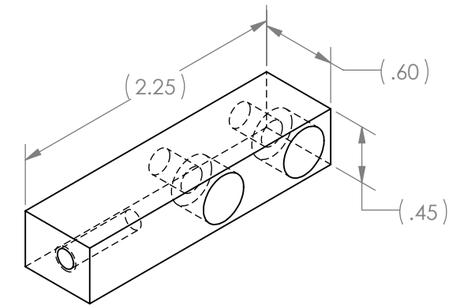

ANODIZING INSTRUCTIONS:
MIL-A-8625, TYPE II, CLASS 2
ANY COLOR, NO SEAL

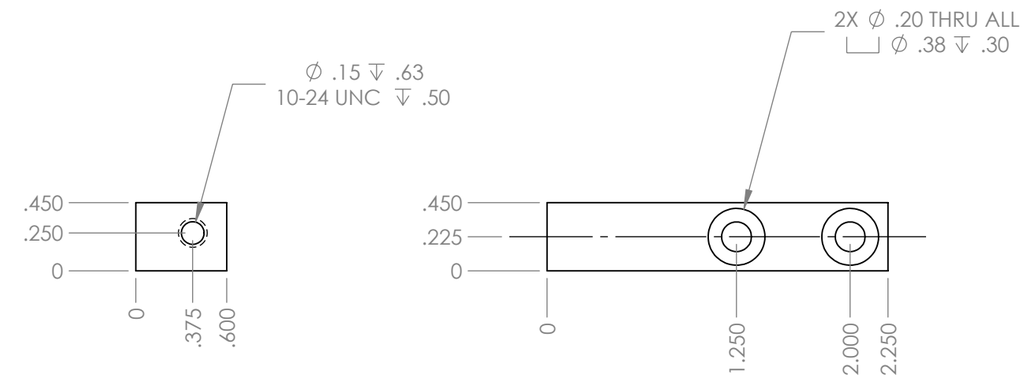

UNLESS OTHERWISE NOTED		APPROVALS		DATE
- APPLICABLE STANDARDS: MIL-STD-XXX - SURFACE FINISH: 125RMS - MACHINED FILLETS: R.015 MAX - REMOVE ALL BURRS, BREAK SHARP EDGES .015 MAX - DIMENSIONS AND SURFACE FINISH TO BE MET AFTER SPECIFIED COATINGS	DIMENSIONS ARE IN INCHES WEIGHT IS IN POUNDS (X.X) INDICATES A REPEATED OR INFORMATIONAL DIMENSION TOLERANCES: FRACTIONS: ± 1/16 .X: ± .050 .XX: ± .030 .XXX: ± .005 ANGLES: ± 1.0	CHIEF ENGR:		
		SYS ENGR:		
		QA/SAFETY:		
		SR ENGR:		
		ENGINEER:	JESS NOE	--/--/----
		CHECKED:		
	MATERIAL: 6061-T6 Aluminum	DRAWN:	JESS NOE	--/--/----
THIRD ANGLE PROJECTION		PROJECT FOLDER: MARS		

APPLIED PHYSICS LABORATORY
UNIVERSITY OF WASHINGTON
1013 NE 40TH ST. SEATTLE, WA. 98105

TITLE: APL STACK, ALUM SPACER BAR 2

SIZE:	CAGE CODE:	DWG NO:	REV:
B	98514	90683	A

WEIGHT:		CAD FILE:	
0.050	**DO NOT SCALE DRAWING**	90683	SHEET 1 OF 1