DWG NO:	94063	SHEET 1

REVISIONS				
ZONE	REV.	DESCRIPTION	DATE	APPROVED
	-	INITIAL RELEASE		

NOTES:

BREAK SHARP EDGES

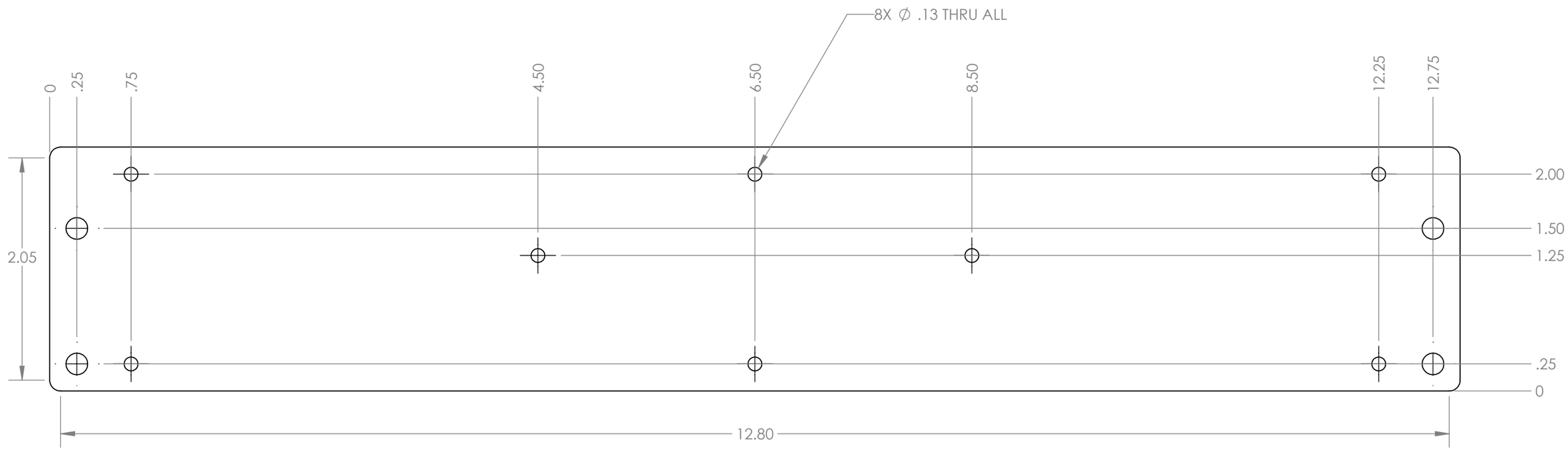

APL SHOP INFORMATION	
WORKTAG	XXX
TASK #	AAA
QUANTITY	x
ORIGINATOR	JESS NOE
PHONE #	206-218-6167
EMAIL	noej@uw.edu

ENGR NOTES:

my note here

UNLESS OTHERWISE NOTED

- APPLICABLE STANDARDS: MIL-STD-XXX
- SURFACE FINISH: 125RMS
- MACHINED FILLETS: R.015 MAX
- REMOVE ALL BURRS, BREAK SHARP EDGES .015 MAX
- DIMENSIONS AND SURFACE FINISH TO BE MET AFTER SPECIFIED COATINGS

THIRD ANGLE PROJECTION

DIMENSIONS ARE IN INCHES
WEIGHT IS IN POUNDS

(X.X) INDICATES A REPEATED OR INFORMATIONAL DIMENSION

TOLERANCES:

FRACTIONS: ± 1/16
.X: ± .050
.XX: ± .030
.XXX: ± .005
ANGLES: ± 1.0

MATERIAL:

PHENOLIC

WEIGHT: 0.544

DO NOT SCALE DRAWING

CAD FILE: 94063 REV -

APPROVALS		DATE
CHIEF ENGR:		
SYS ENGR:		
QA/SAFETY:		
SR ENGR:		
ENGINEER:	JESS NOE	--/--/----
CHECKED:		
DRAWN:	JESS NOE	--/--/----

APPLIED PHYSICS LABORATORY
UNIVERSITY OF WASHINGTON
1013 NE 40TH ST. SEATTLE, WA. 98105

TITLE: INDUCTOR MOUNT BOARD, PHENOLIC

PROJECT FOLDER: MARS

SIZE:	CAGE CODE:	DWG NO:	REV:
B	98514	94063	-

SHEET 1 OF 1