ITEM NO.	PART NUMBER	DESCRIPTION	QTY.
1	90047A115	5/16"-18 Center-Lock Distorted-Thread Locknut	4
2	90557	BACK FIBERGLASS PLATE, APL STACK	1
3	92200A245	#10-24, L-0-75, SS18-8 Socket Head Screw	8
4	90558	LOWER BAR FIBERGLASS PLATES, APL STACK	2
5	90559-90560	SIDE FIBERGLASS PLATES, APL STACK	2
6	90562	APL STACK, ALUM TOP BAR	2
7	90563	APL STACK, ALUM BOTTOM BAR	2
8	90564	TOP BAR FIBERGLASS PLATE, APL STACK	1
9	90682	APL STACK, ALUM SPACER BAR 1	2
10	90683	APL STACK, ALUM SPACER BAR 2	2
11	90945A741	#10 SS18-8 Flat Socket Washer	8
12	MMC 92141A011	#10 SS18-8 Flat Washer	40
13	92146A030	5/16" SS18-8 Split Lock Washer	4
14	MMC 92146A550	#10 SS18-8 Split Lock Washer	48
15	90561	APL STACK, ALUM MIDDLE BAR	4
16	92198A692	5/16"-18, L 2-1/4", SS18-8 Hex Head Screw	4
17	MMC 92314A244	#10-24, L-0-63", SS18-8 Hex Head Screws	26
18	94785A007	#6-32 SS18-8 Square Nut	8
19	98017A689	5/16" SS18-8 Flat Washer	8
20	Servocity_633166_#6_L-0-50_Spacer_AnodAlum	#6, L-0-50", ALUM SPACER	10
21	Servocity_633172_#6_L-1-25_Spacer_AnodAlum	#6, L-1-25", ALUM SPACER	55
22	90574	#6 ROD, L-7", WELDED SQUARE NUT	6
23	90573	#6 ROD, L-5", WELDED SQUARE NUT	2
24	MMC 92314A247	#10-24, L-1", SS18-8 Hex Head Screws	14
25	87135K32	PVC ROD, 0.5", WIRE MANAGEMENT APL STACK	7
26	94639A554	#10, L-0-1/2", Off-White Nylon Unthreaded Spacer	14
27	90572	#6 ROD, L-6.75", WELDED HEX NUT	4
28	90045A010	#6-32 Top-Lock Distorted-Thread Locknut	20
29	90295A080	#6 Nylon Plastic Washer	20
30	92146A540	#6 SS18-8 Split Lock Washer	10
31	90945A716	#6 SS18-8 Flat Washer	10
32	90571	#6 ROD, L-6", WELDED HEX NUT	1
33	90570	#6 ROD, L-2", WELDED HEX NUT	5

DWG NO: 94073 SHEET 1

REVISIONS

ZONE	REV.	DESCRIPTION	DATE	APPROVED

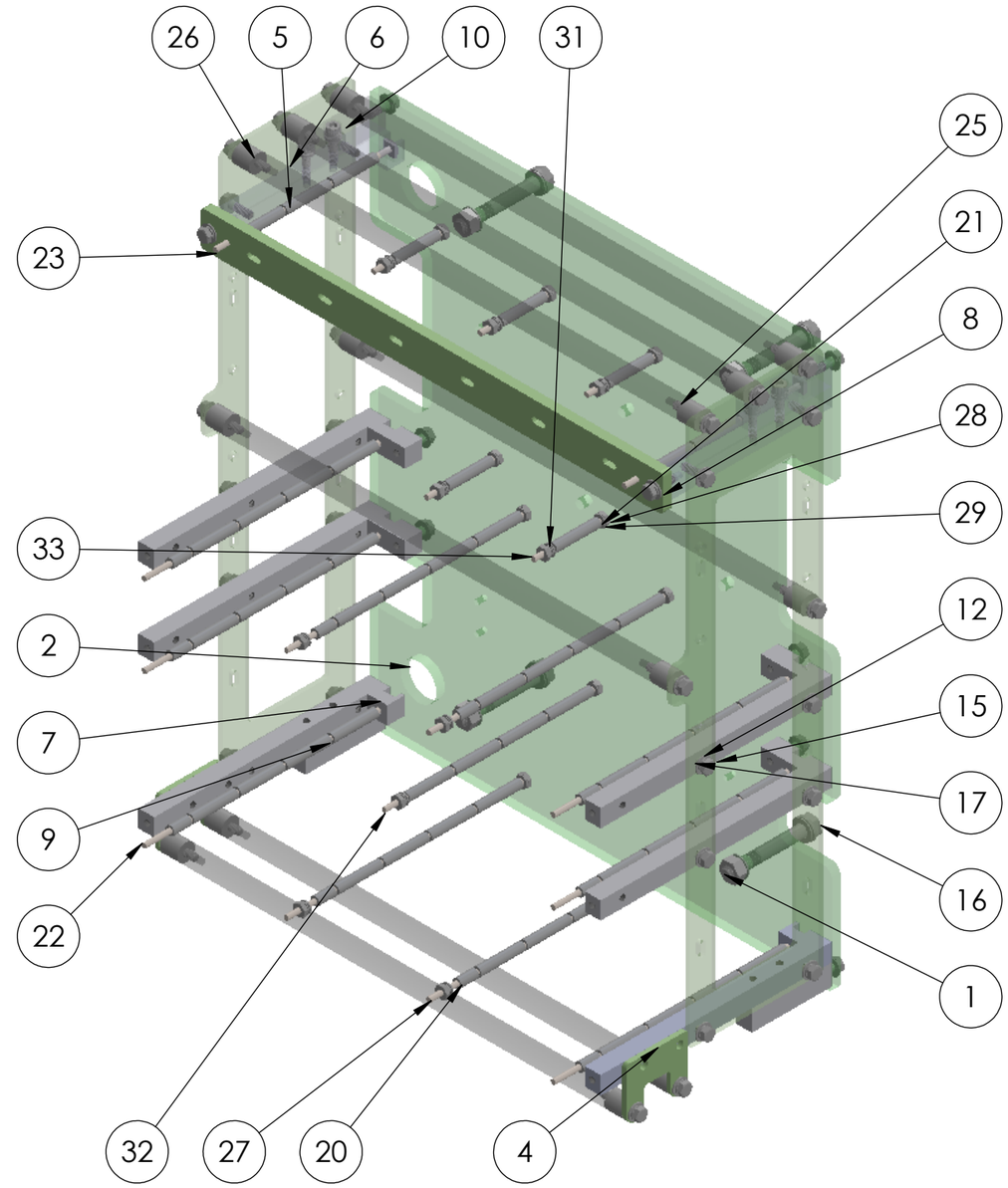

UNLESS OTHERWISE NOTED

- APPLICABLE STANDARDS: MIL-STD-XXX
- SURFACE FINISH: 125RMS
- MACHINED FILLETS: R.015 MAX
- REMOVE ALL BURRS, BREAK SHARP EDGES .015 MAX
- DIMENSIONS AND SURFACE FINISH TO BE MET AFTER SPECIFIED COATINGS

THIRD ANGLE PROJECTION

DIMENSIONS ARE IN INCHES WEIGHT IS IN POUNDS

(X.X) INDICATES A REPEATED OR INFORMATIONAL DIMENSION

TOLERANCES:
FRACTIONS: ± 1/16
.X: ± .050
.XX: ± .030
.XXX: ± .005
ANGLES: ± 1.0

MATERIAL:
Material <not specified>

WEIGHT: 2.914

APPROVALS		DATE
CHIEF ENGR:		
SYS ENGR:		
QA/SAFETY:		
SR ENGR:		
ENGINEER:	JESS NOE	--/--/----
CHECKED:		
DRAWN:	JESS NOE	--/--/----

APPLIED PHYSICS LABORATORY
UNIVERSITY OF WASHINGTON
1013 NE 40TH ST. SEATTLE, WA. 98105

TITLE: APL Stack Fiberglass System

PROJECT FOLDER: MARS

SIZE: B | CAGE CODE: 98514 | DWG NO: 94073 | REV: A

DO NOT SCALE DRAWING

CAD FILE: AsmbSub2_94073_Fiberglass-Bar-System

SHEET 1 OF 1