| DWG NO: | SHEET 1 |
|---|---|

| REVISIONS | | | | |
|---|---|---|---|---|
| ZONE | REV. | DESCRIPTION | DATE | APPROVED |

# NOTES:
BREAK SHARP EDGES

| APL SHOP INFORMATION | |
|---|---|
| Worktag | XXX-XXX |
| TASK # | AAA |
| QUANTITY | x |
| ORIGINATOR | JESS NOE |
| PHONE # | 206-218-6167 |
| EMAIL | noej@uw.edu |

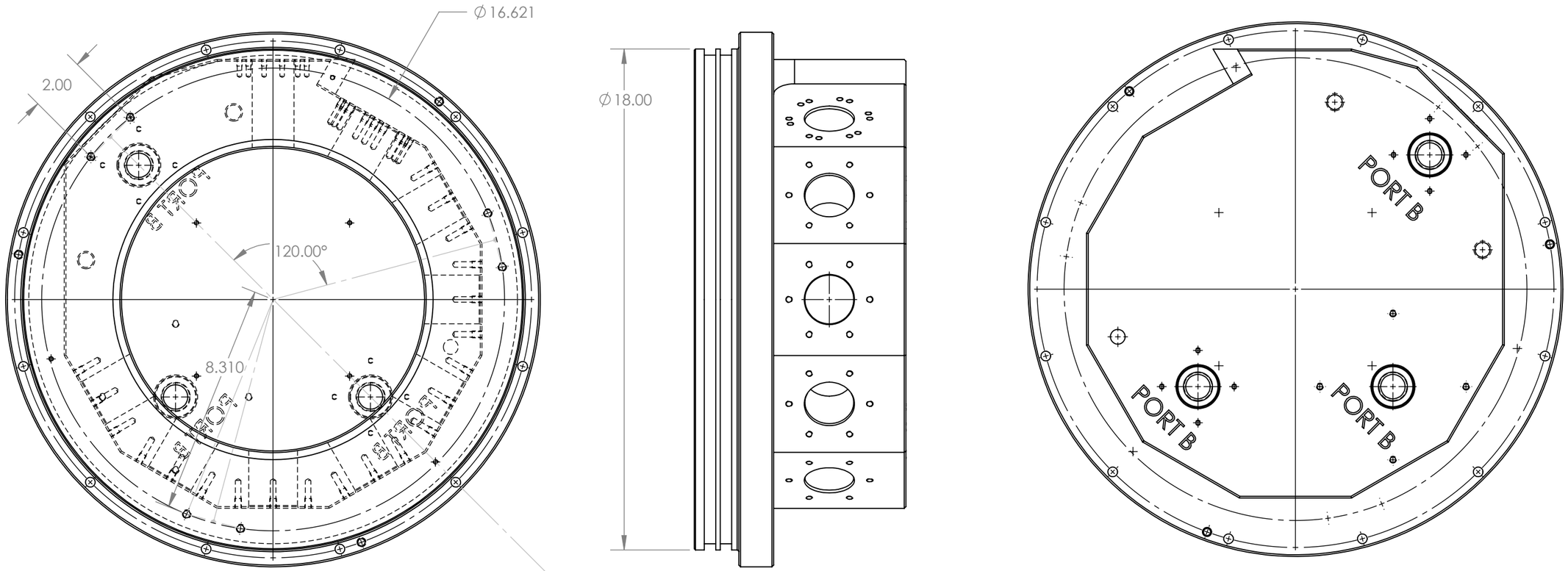


| UNLESS OTHERWISE NOTED | | APPROVALS | DATE |
|---|---|---|---|
| - APPLICABLE STANDARDS: MIL-STD-XXX<br>- SURFACE FINISH: 125RMS<br>- MACHINED FILLETS: R.015 MAX<br>- REMOVE ALL BURRS, BREAK SHARP EDGES .015 MAX<br>- DIMENSIONS AND SURFACE FINISH TO BE MET AFTER SPECIFIED COATINGS | DIMENSIONS ARE IN INCHES<br>WEIGHT IS IN POUNDS<br>(X.X) INDICATES A REPEATED OR INFORMATIONAL DIMENSION<br>TOLERANCES:<br>FRACTIONS: ± 1/16<br>.X: ± .050<br>.XX: ± .030<br>.XXX: ± .005<br>ANGLES: ± 1.0 | CHIEF ENGR: | |
| | | SYS ENGR: | |
| | | QA/SAFETY: | |
| | | SR ENGR: | |
| | | ENGINEER: | |
| | | CHECKED: | |
| | MATERIAL: | DRAWN: | |
| THIRD ANGLE PROJECTION | | PROJECT FOLDER: | |

**APPLIED PHYSICS LABORATORY**
**UNIVERSITY OF WASHINGTON**
1013 NE 40TH ST. SEATTLE, WA. 98105

TITLE: END CAP, LV/COMMS HOUSING

| SIZE: | CAGE CODE: | DWG NO: | REV: |
|---|---|---|---|
| B | 98514 | | A |

| WEIGHT: | | CAD FILE: | |
|---|---|---|---|
| 177.205 | **DO NOT SCALE DRAWING** | LEGACY_110405-100 B_Endcap_ManyConnenctors | SHEET 1 OF 1 |