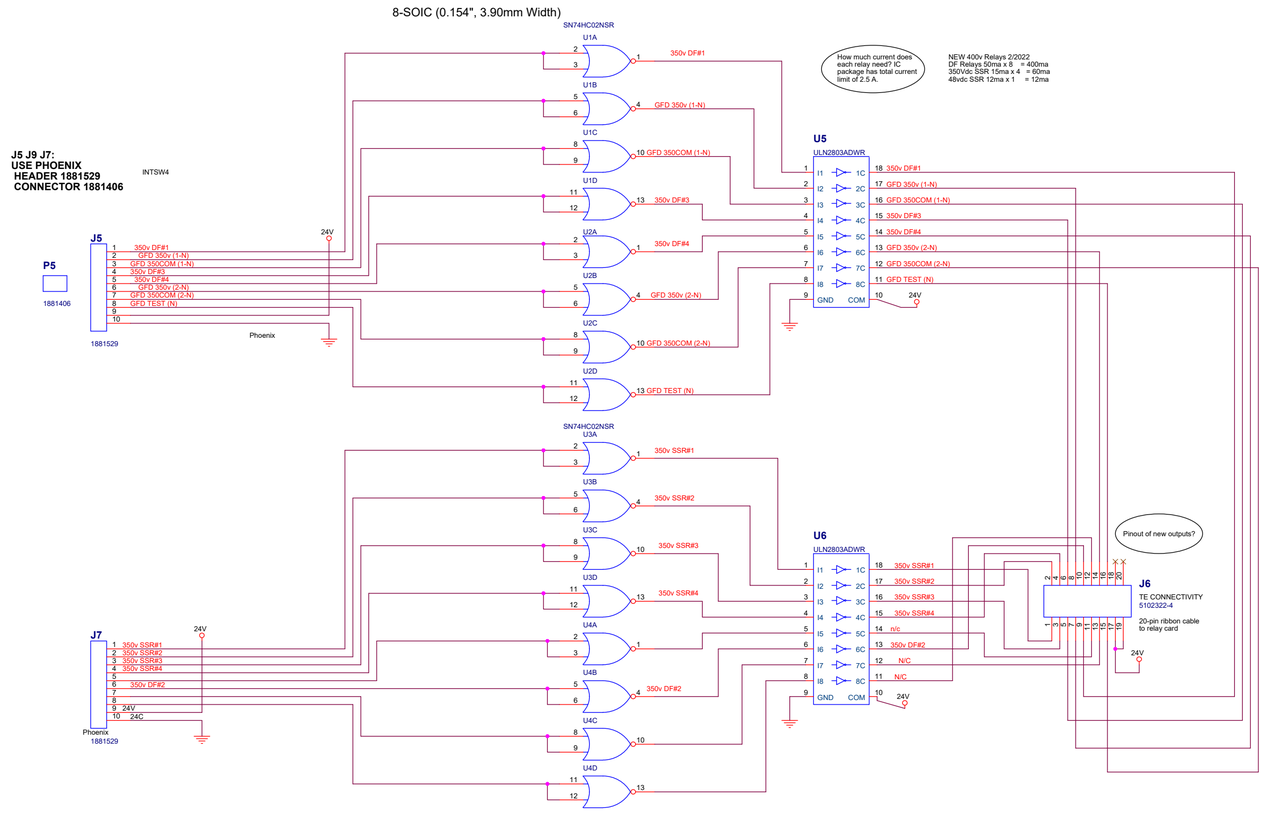
8-SOIC (0.154", 3.90mm Width)
SN74HC02NSR
How much current does each relay need? IC package has total current limit of 2.5 A.
NEW 400v Relays 2/2022
DF Relays 50ma x 8 = 400ma
350Vdc SSR 15ma x 4 = 60ma
48vdc SSR 12ma x 1 = 12ma
J5 J9 J7:
USE PHOENIX
HEADER 1881529
CONNECTOR 1881406
INTSW4
P5
1881406
J5
1881529
Phoenix
U5
ULN2803ADWR
U6
ULN2803ADWR
J7
Phoenix
1881529
Pinout of new outputs?
J6
TE CONNECTIVITY
5102322-4
20-pin ribbon cable to relay card
5102322-4
J6
CONNECT
J6 Pin 1 350v SSR#1
J6 Pin 2 350v SSR#2
J6 Pin 3 350v SSR#3
J6 Pin 4 350v SSR#4
J6 Pin 5 GFD 350COM (1-N)
J6 Pin 6 350v DF#3
J6 Pin 7 350v DF#4
J6 Pin 8 GFD 350v (1-N)
J6 Pin 9 350v DF#1
J6 Pin 10 350v DF#2
J6 Pin 11 N/C
J6 Pin 12 N/C
J6 Pin 13 N/C
J6 Pin 14 GFD 350v (2-N)
J6 Pin 15 GFD 350COM (2-N)
J6 Pin 16 GFD TEST (N)
J6 Pin 17 24v
J6 Pin 18 N/C
J6 Pin 19 24v
P6
1658621-4
TE CONNECTIVITY
J11
FROM CURRENT MONITOR BOARD
MOLEX_0705530005
J10
TO DENKOVI DAEnetIP4
MOLEX_571-826632-5
P9
1881406
P7
1881406
U30
ISL21080DIH312Z-TK
U28 HIH-4000
U29 LM35_TO-92
TP7 TP10 TP14 TP15
R10 R11 R12 R13 R14 R15 R16 R17
U24 U25 U26 U27
AD8628ARZ-REEL7
J8:
USE PHOENIX
HEADER 1881464
CONNECTOR 1881341
TEST POINTS
5 VDC IN
J8
Phoenix
1881464
P8
1881341
R1 0 Ohms
D2
TVS_5V_Standoff
U1E U2E U3E U4E
SN74HC02NSR
MOUNTING HOLES # 6 WITH WASHER
MT1 MT2 MT4 MT3
RN2D
5k
UNUSED
NOR
A + B
Rev C:
Connector change
Deletion of extra wire ways
Rev D:
?
Rev E:
Added U4 SR latch
Added input protection resistors
Rev F:
Changed drivers from source to sink.
Changed current sense input to 500 mV/A.
Added 8 more output channels.
Scaling is 0.5 V / A
Board dimensions to be the same as Relay Board VEN2016-003. With the same mounting holes
Drawn by: P McGill, C Dawe, D Thompson and D French
Title
TTL-24Vdc Level Shift LCB
Size D
Document Number 100221371
Rev J
Date: Tuesday, March 01, 2022
Sheet 1 of 7