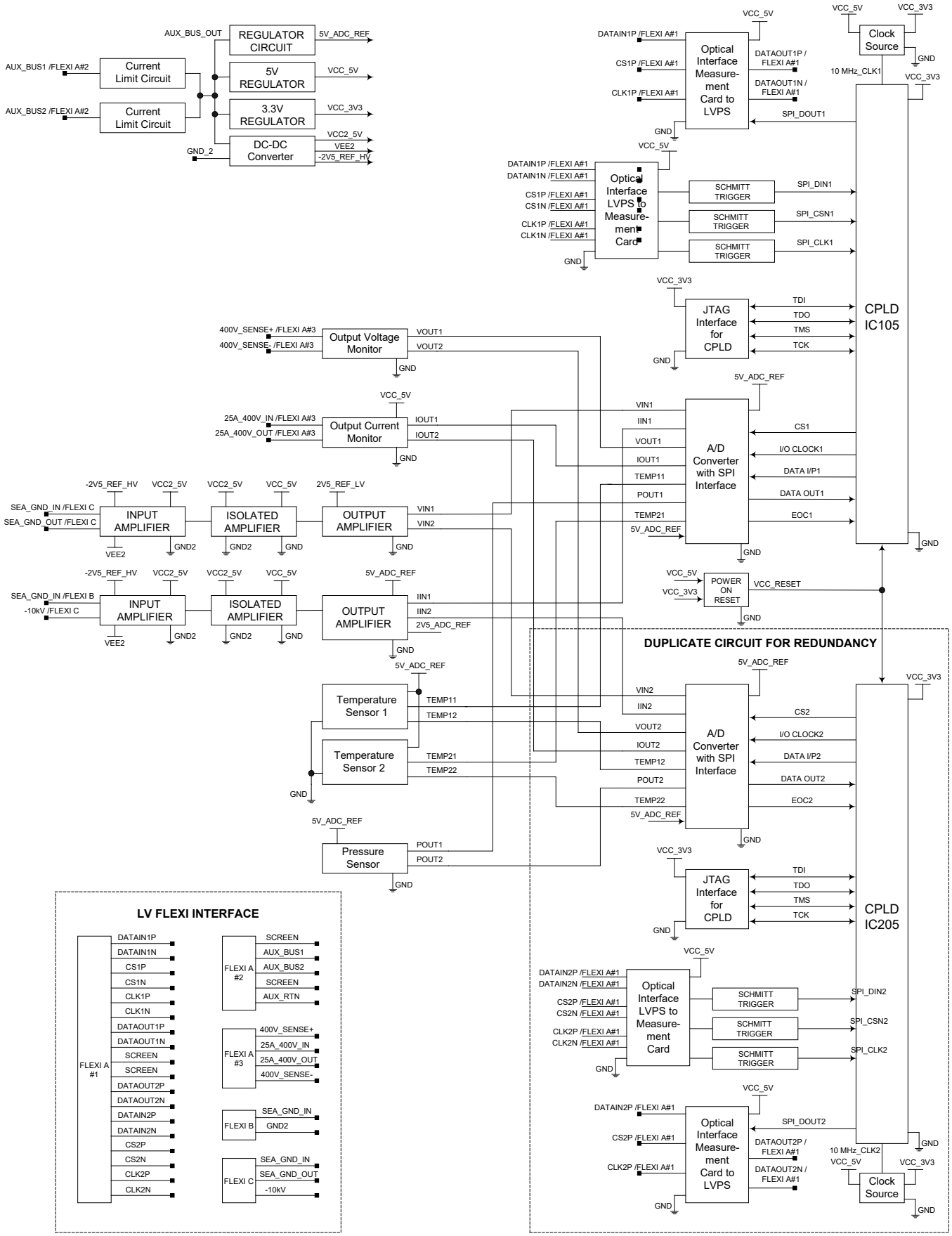BLOCK DIAGRAM FOR MVC MEASUREMENT CARD