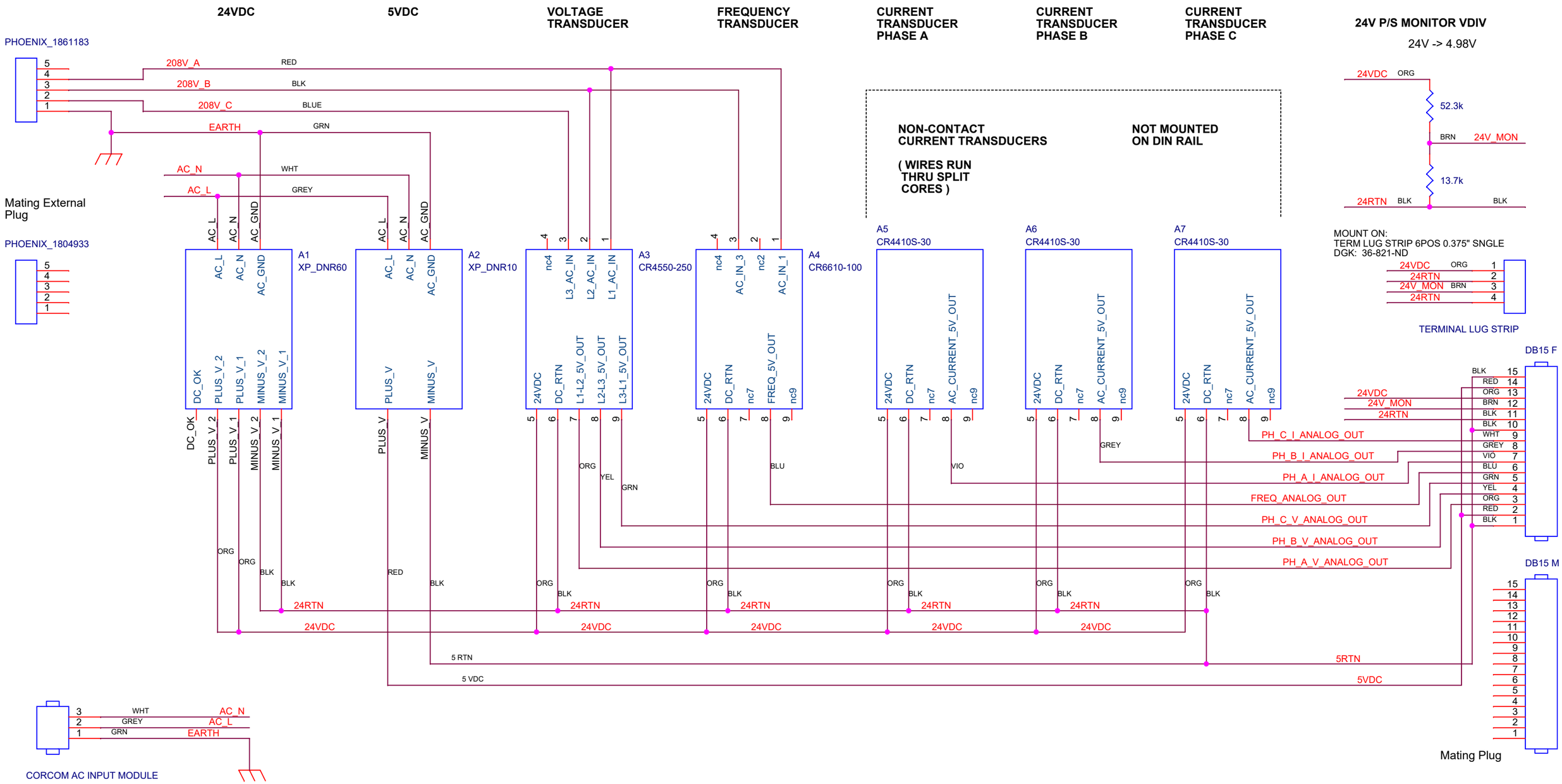

Title	SCH, MARS GEN 3 PHASE MON, DIN RAIL	
Size B	Document Number 100221380	Rev A
Date: Monday, March 23, 2020	Sheet 1 of 1	