REVISIONS				
ZONE	REV.	DESCRIPTION	DATE	APPROVED

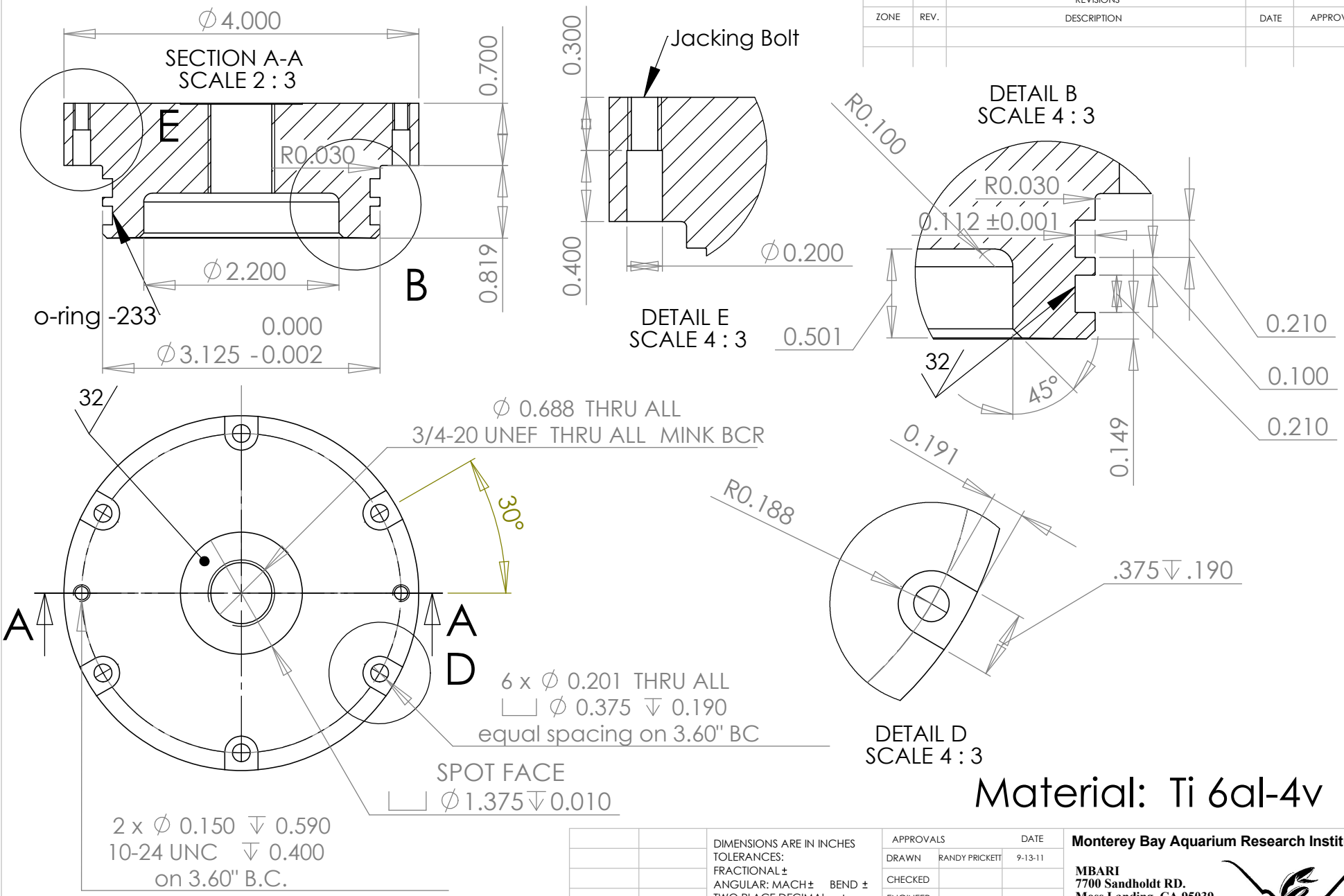

Material: Ti 6al-4v

Note: o-ring -233
w/ 1 parbak ring

		DIMENSIONS ARE IN INCHES TOLERANCES: FRACTIONAL ± ANGULAR: MACH ± BEND ± TWO PLACE DECIMAL ± THREE PLACE DECIMAL ±	APPROVALS		DATE
			DRAWN	RANDY PRICKETT	9-13-11
			CHECKED		
			ENGINEER		
		MATERIAL --	PROJECT NO.		
			PROJECT		
NEXT ASSY	USED ON	FINISH --			
APPLICATION		DO NOT SCALE DRAWING			

Monterey Bay Aquarium Research Institute

MBARI
7700 Sandholdt RD.
Moss Landing, CA 95039
PH: (831) 775-1700

MARS NODE END-CAP

SIZE	DWG. NO.	REV.
A		
SCALE:1:2	WEIGHT:	SHEET 1 OF 1