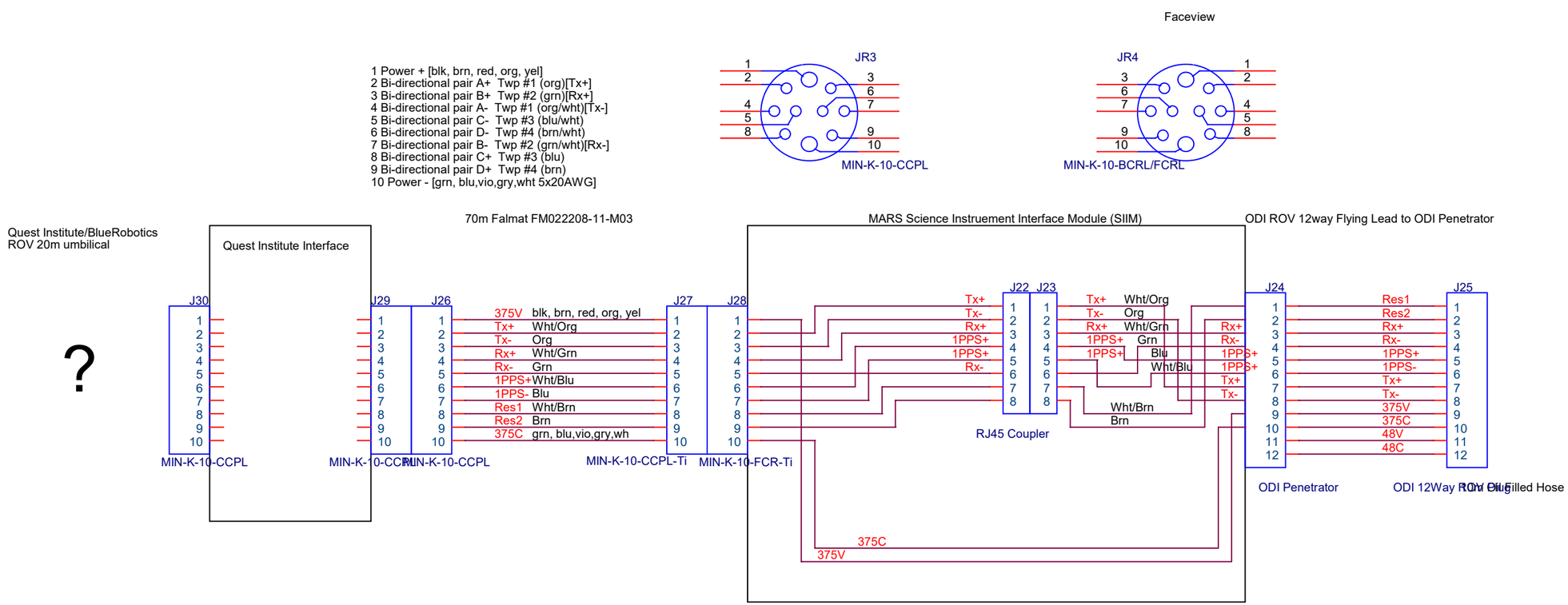

Title	Quest Institute Interface Assembly
Size B	Document Number VEN2017-XXX
Rev	A
Date:	Friday, February 02, 2018
Sheet	1 of 1