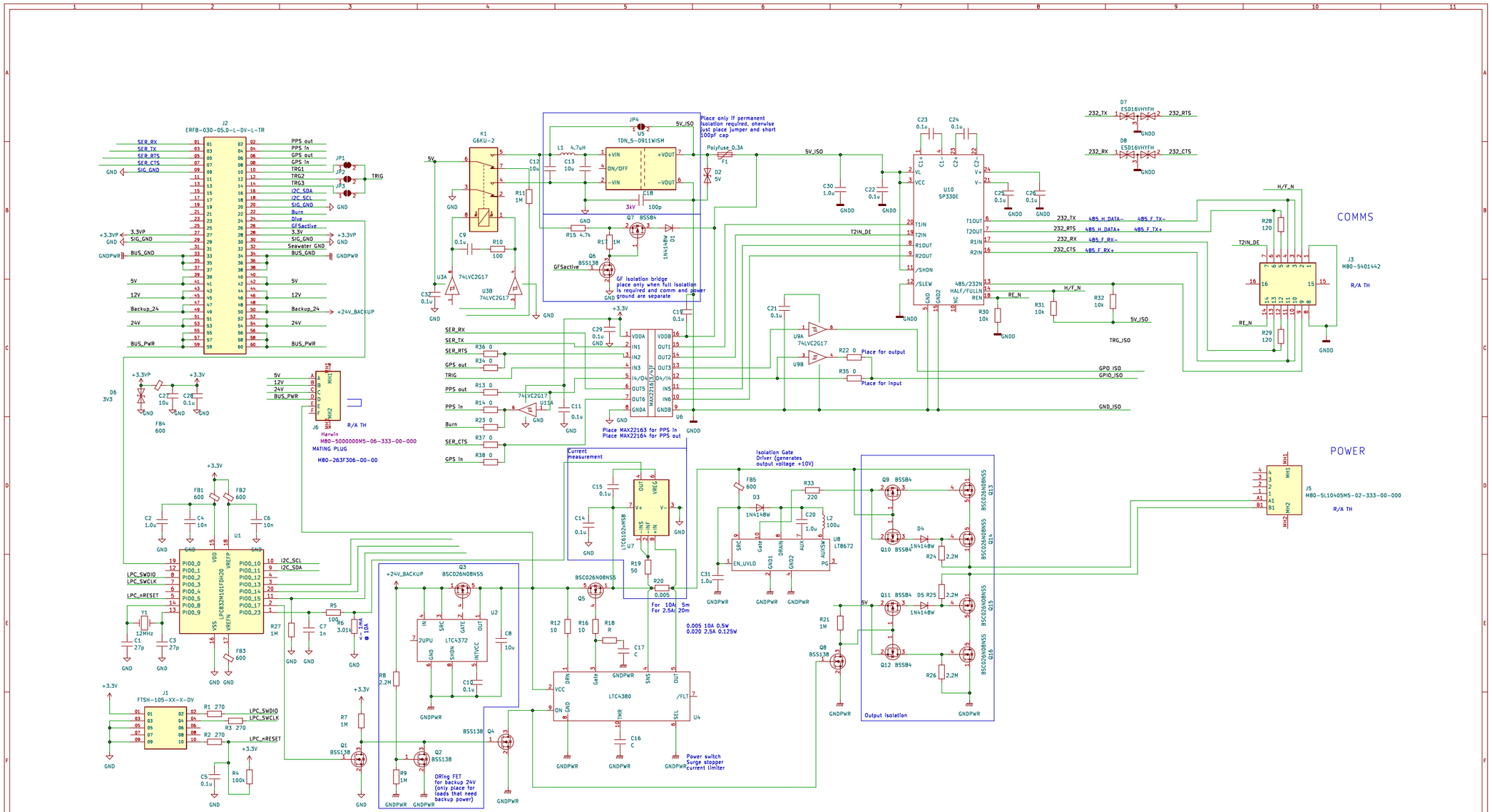

Unconnected signals:

Burn J2 - 22
GPS In - 08
GPS Out - 06

File Location:

\\atlas\ProjectLibrary\36B000_DMO_DORADO\Project.Drawings\Project.EE.Dwgs\SchematicDiagrams\KICAD\LCB_Prototype\lcb\lcb.kicad_sch

Sheet: /		
File: lcb_rev_a.kicad_sch		
Title:		
Size: C	Date:	Rev:
KiCad E.D.A. eeschema 7.0.2		Id: 1/1