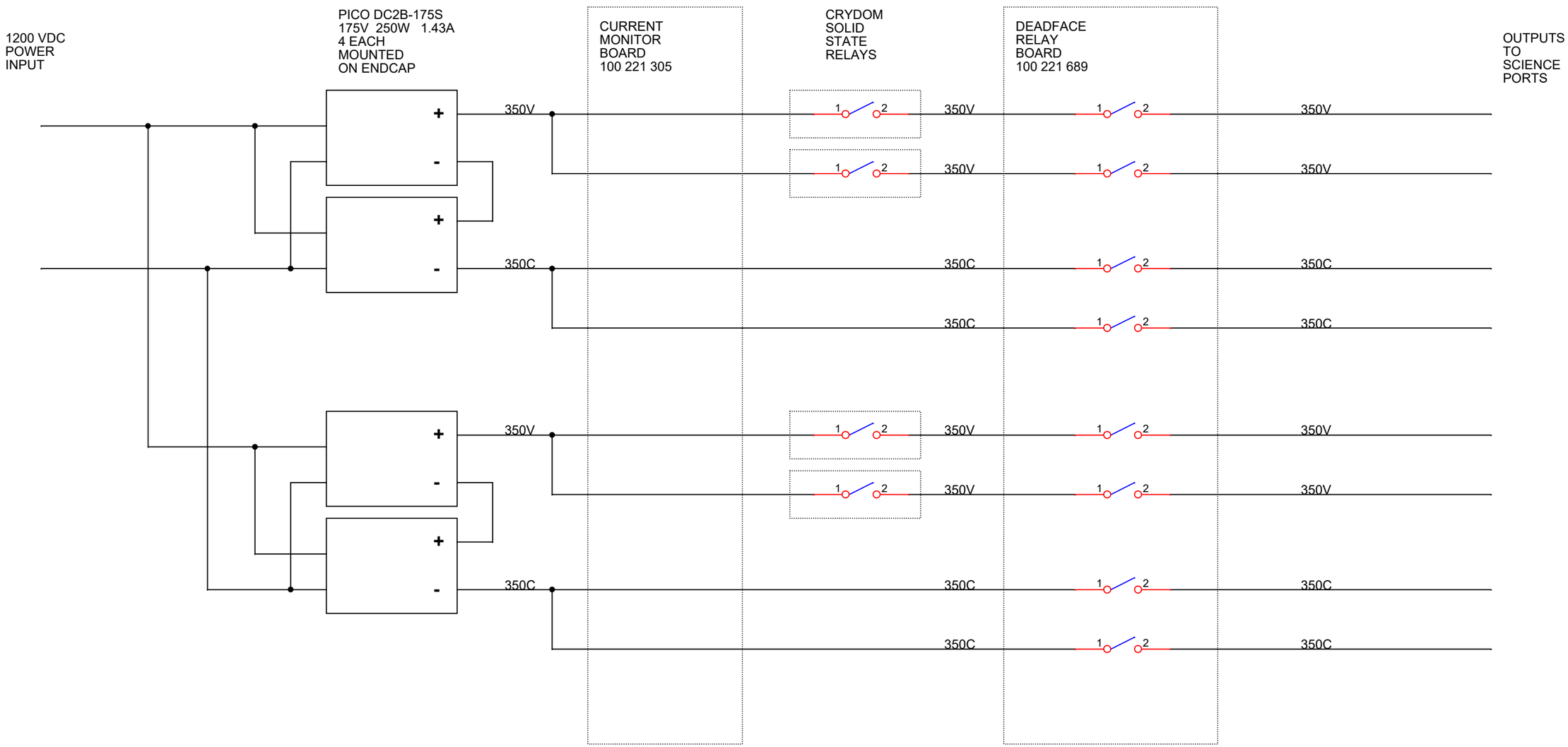

Title	BD, MINI NODE 350V OVERVIEW	
Size B	Document Number 100221689	Rev A
Date: Tuesday, February 08, 2022	Sheet 1 of 1	