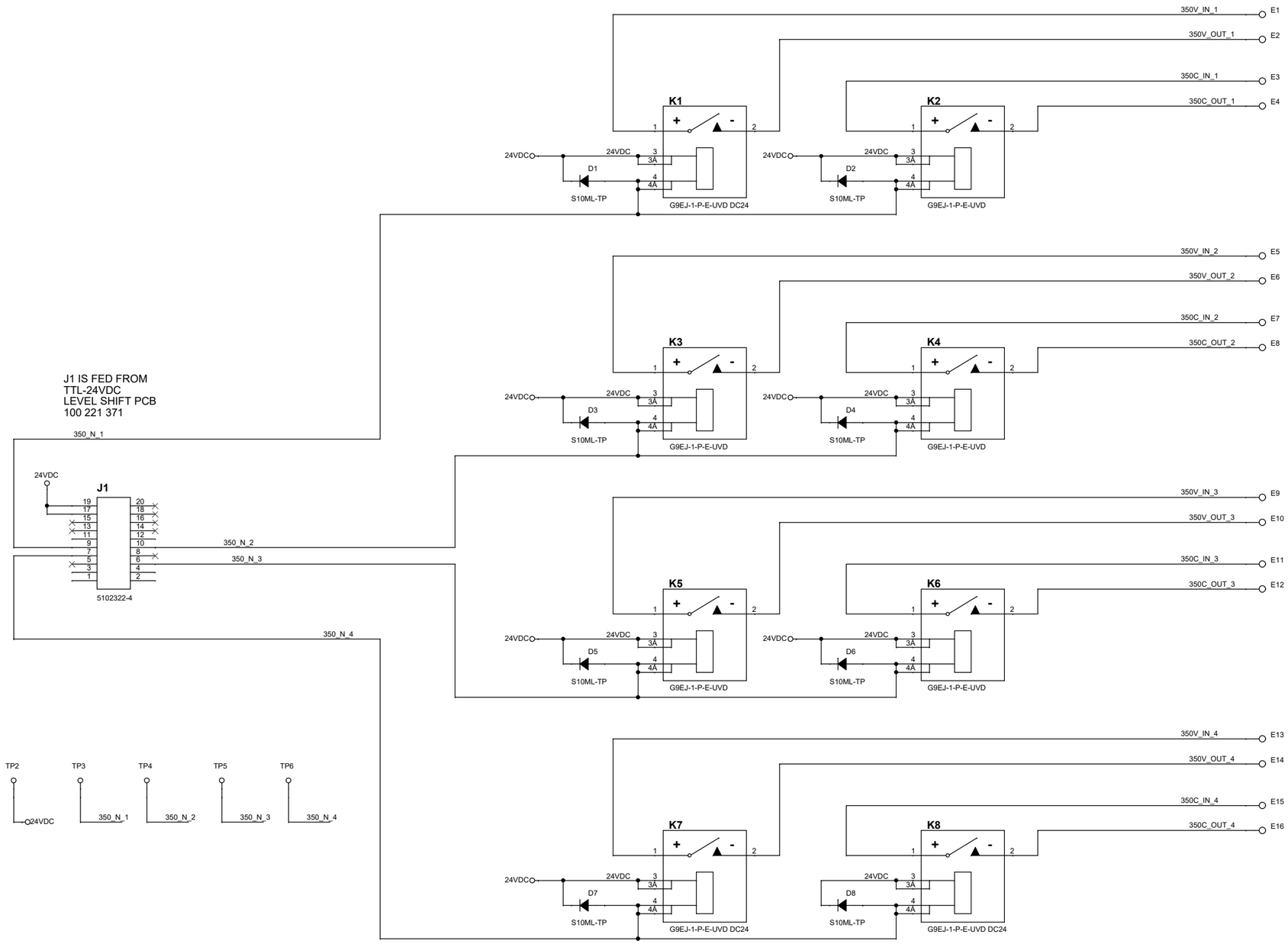

NOTES:

EACH RELAY COIL 50mA @ 24VDC

BOARD DIMENSIONS:

3.5 " X 6.5" (X DIM COULD EXTEND TO 6")

MOUNTING HOLES # 6 WITH WASHER

MT1 MT2 MT3 MT4

Title	**SCH, MARS MINI NODE RELAY BOARD**	
Size **C**	Document Number **100221689**	Rev **A**
Date: Wednesday, February 09, 2022	Sheet 1 of 1	